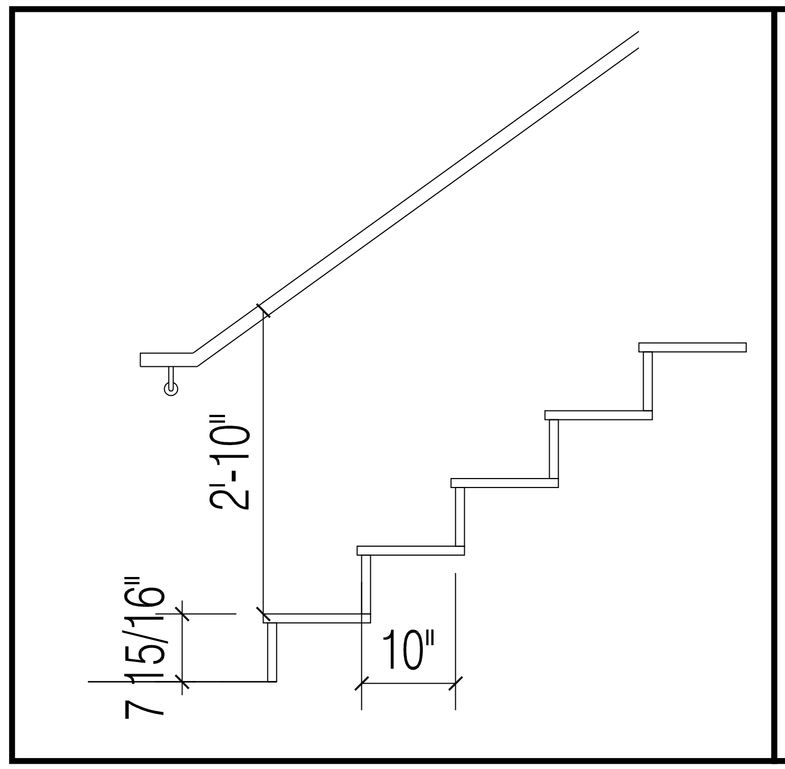

1 STAIR DETAIL
1" = 1'-0"

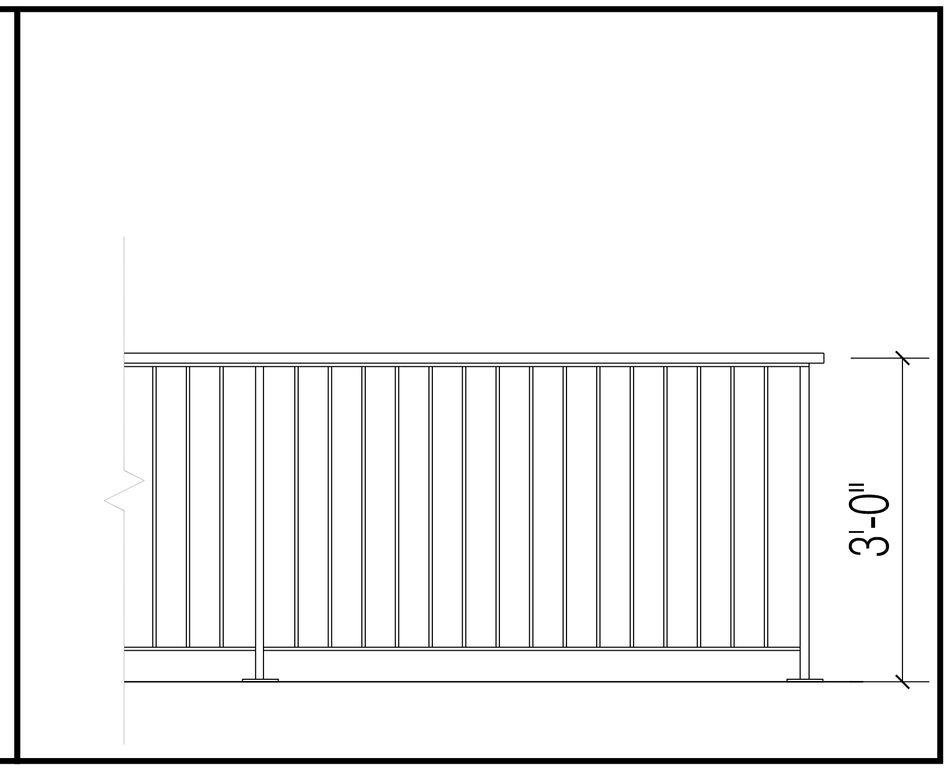

2 RAILING DETAIL
1" = 1'-0"

STAIR NOTES:

STAIRS SHALL HAVE HARDWOOD TREADS.

STAIR NOSING SHALL EXTEND ½" BEYOND RISER.
PROVIDE WALL MOUNTED HANDRAIL 34" ABOVE NOSING.

NEW STAIR RAILING ON THIRD FLOOR TO BE 1' X 1-½" PAINTED STEEL POSTS WITH ⅜" X 1" STEEL BALUSTERS @4" ON CENTER. RAILING WILL BE DECK MOUNTED OR ATTACHED TO FLOOR FRAMING.

NEW STAIR RAILING ON THIRD FLOOR SHALL BE 36" HIGH.

MAXIMUM SPACING BETWEEN BALUSTERS IS 3 7/8".

MINIMUM HEADROOM IS 7'-0".

EXISTING STAIRWAYS TO BE PAINTED.

PROSPECT
DESIGN
58 FORE ST. PORTLAND, ME
www.prospectdesign.me
T: 207 - 749 - 7400

29 ATLANTIC

SUSAN GRISANTI
75 Market Street, Suite 203, Portland, ME

PERMIT SET

SHEET TITLE
STAIR DETAILS

REVISION

DRAWN BY: BB
DATE: April 29, 2014

A-401