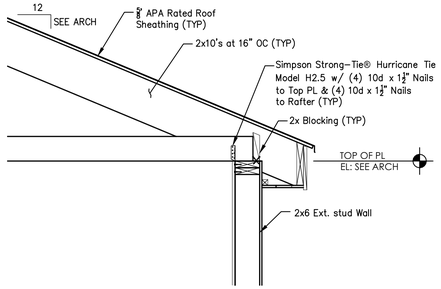

L1 — 3/4" = 1'-0"

TYPICAL RAFTER CONN DETAIL

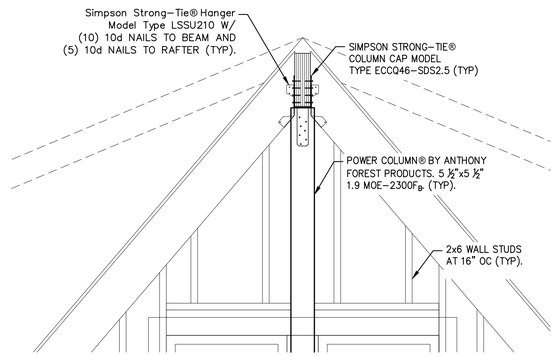

L6 — 3/4" = 1'-0"

TYPICAL RIDGE BEAM CONN DETAIL

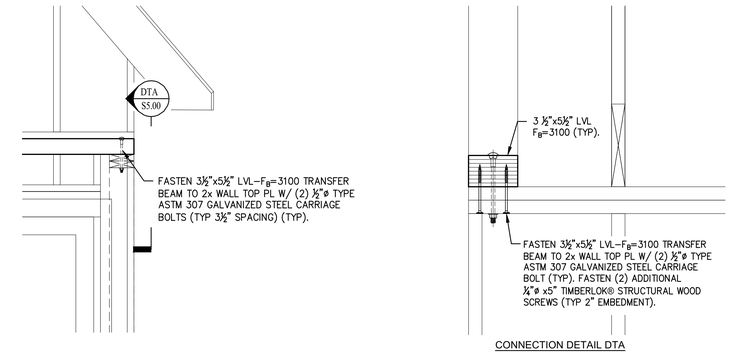

CONNECTION DETAIL DTA

L11 — 3/4" = 1'-0"

TYPICAL WALL PLATE/BEAM CONN DETAIL

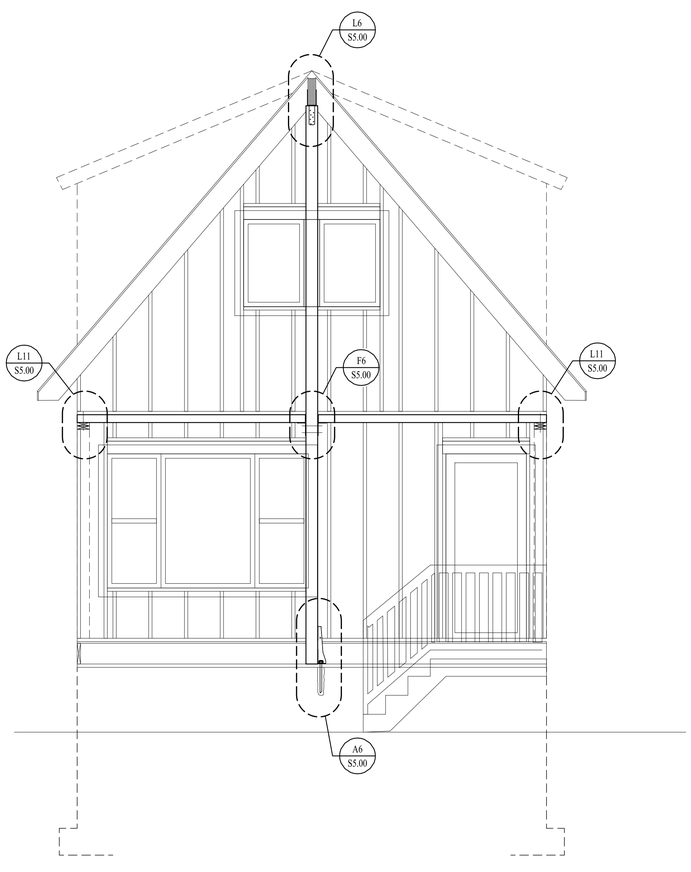

A1 — 3/4" = 1'-0"

SOUTHEAST BUILDING ELEVATION

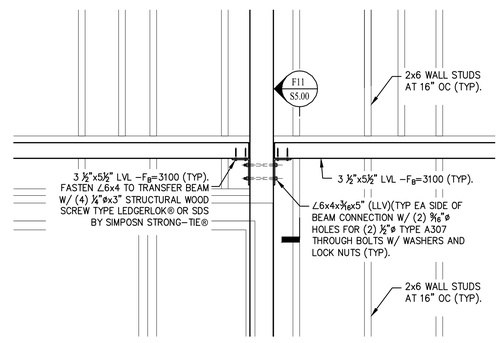

F6 — 3/4" = 1'-0"

TYPICAL BEAM/POST CONN DETAIL

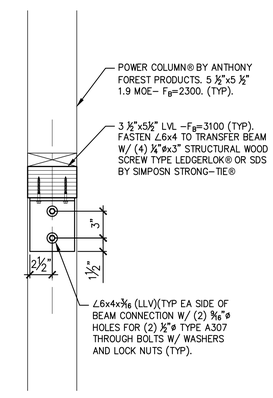

F11 — 1-1/2" = 1'-0"

TYPICAL BEAM CONN DETAIL

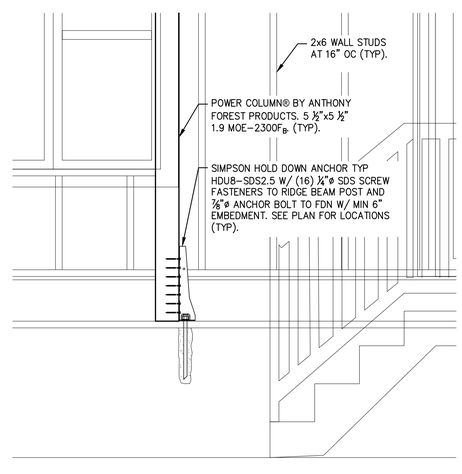

A6 — 3/4" = 1'-0"

TYPICAL POST BASE CONN DETAIL

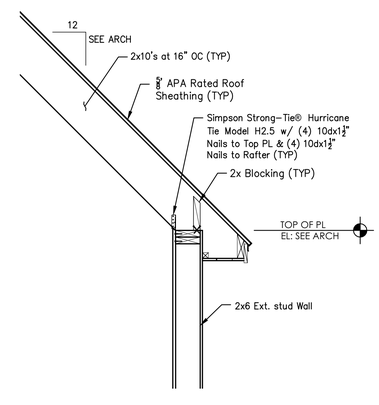

A11 — 3/4" = 1'-0"

TYPICAL RAFTER CONN DETAIL

Downeast Structural Consultants LLC
5 Oak Street, Cumberland, Maine 04021
Office 207.829.8015 Mobile 207.650.3093
Email craig@downeaststructural.com

Reviewed for Code Compliance Inspections Division Approved as Noted

Date: 11/28/17

OWNER:
LIV CHASE
PORTLAND, ME

ARCHITECT/DESIGNER:
ROCKWOOD DESIGN STUDIO
MOUNT DESERT, ME

PREPARED FOR:
LIV CHASE
PORTLAND, ME

Project:

Proposed Single Family Residence
5 MONUMENT STREET
PORTLAND, MAINE

REVISIONS:

No.	Description	Date

Seal:

STATE OF MAINE — CHRISTOPHER F RAY No. 10547 — LICENSED — PROFESSIONAL ENGINEER

CURRENT ISSUE STATUS:

■ *SUBMITTED FOR APPROVAL*
Date: 11/28/2017

Drawing Title:

BUILDING SECTION AND DETAILS

Project No:	17170
Date	11/17/2017
Drawn by	CFR
Checked by	CFR

Drawing Number:

S5.00

Scale: As Noted