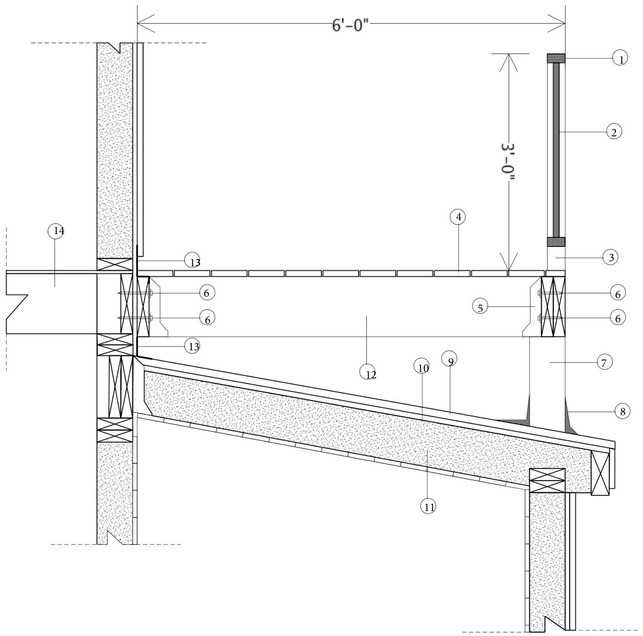

1) Deck Hand Rail = 1.5" width in diameter
2) 1" wooden spindles @ 4.5" OC
3) Spacing is 4"from top of deck to underside of cross bar
4) 5/4"X6" PT decking
5) Joist Hanger
6) 1/2"through bolt with washer
7) 6X6 corner post running from foundation wall to bottom of deck framing.
8) Typical flashing, rubber membrane
9) Rubber EDP roof membrane
10) 3/4" OSB sheathing
11) 7.5" of closed cell insulation.
12) 2X10 PT deck joist @ 16"OC
13) Continuous flashing with drip edge
14) 2X10 interior floor joist @ 16"OC

Section Detail- Second Floor Deck and Bathroom Ceiling
1" =1'-0"

Reviewed for Code Compliance
Approved
Approved with Conditions
Date: 11/28/17

New Single Family
A M E N D M E N T
5 Monument Street Portland, Maine

Rockwood Design Studio
PO Box 520
Mount Desert, ME 04660

rockwooddesignstudio@gmail.com

Date: 11/6/17

ST4