ALL CONSTRUCTION TO MEET INTERNATIONAL RESIDENTIAL CODE. IF NOT SPECIFICALLY NOTED, VERIFICATION WILL BE MADE IN THE FIELD BY CONTRACTOR.

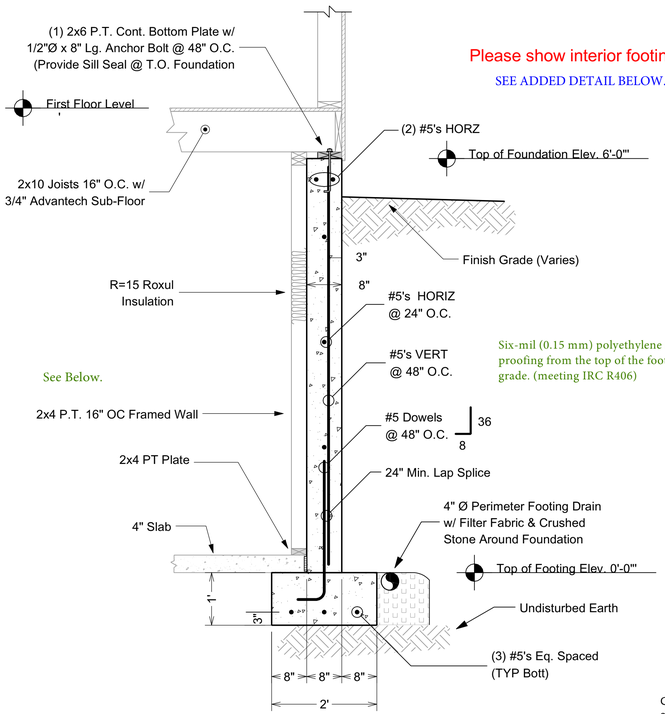

Please show interior footing detail

SEE ADDED DETAIL BELOW.

Six-mil (0.15 mm) polyethylene to provide damp proofing from the top of the footing to the finished grade. (meeting IRC R406)

8" FOUNDATION DETAIL

Scale: 3/4"=1'

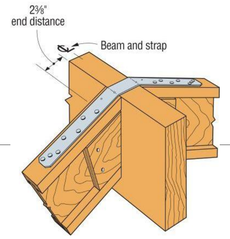

Simspon LSTA Strap Ties (meets IRC R602.3(1))

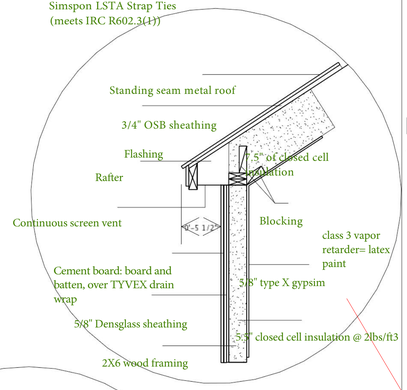

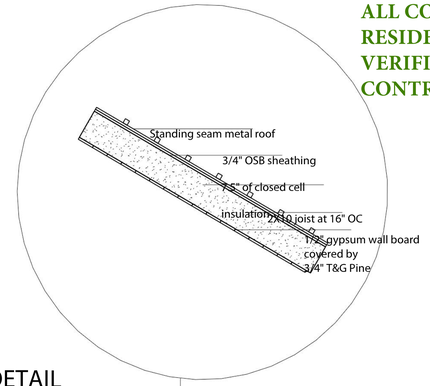

Structural Notes:
CONNECTIONS
(1) Ridge Beam to Rafters: LSS210- Simpson Strong Tie
(2) Column to Ridge Beam: EPC6Z- Post Cap by Simpson
(3) Center Column to Ridge Beam: Custom CCCQ Hanger
(4) Wall to Roof: H2.5A- Simpson Hurricane Tie

All door/window headers (3)2x6
All door/window jack studs (2)2X 6 on both sides of opening
Full depth horizontal blocking every 4' -0"
for all exterior walls.
Continuous sheathing also provides additional bracing.

ROOF DETAIL
1/2" = 1'-0"

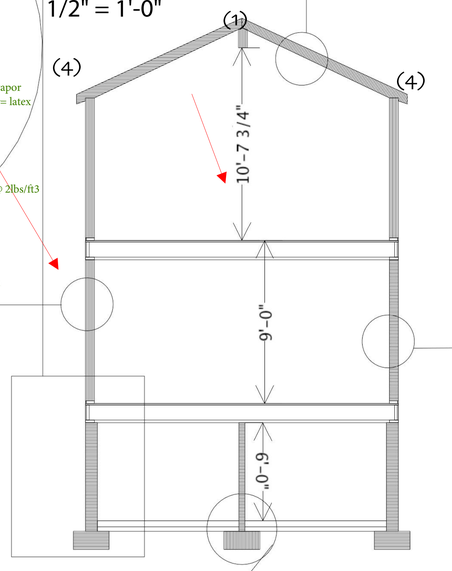

The separation distance is 5'-0". The property is bound by a 5'-0" no build area on the northeast side of property. Book:34251 Page: 100.
The projection of the roof line is 5.5" and within the boundary of the lot.

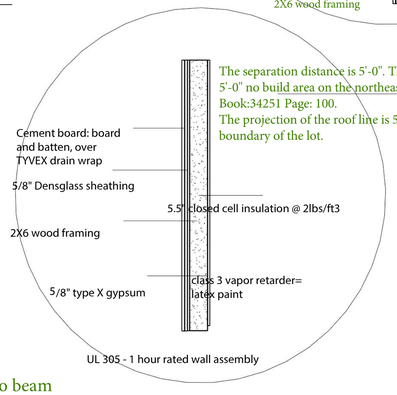

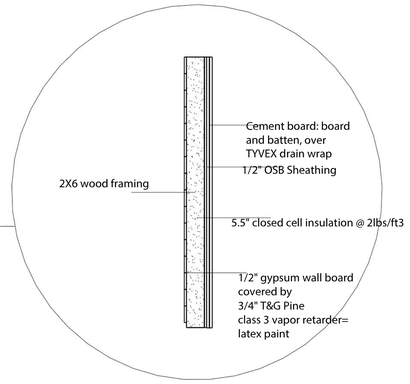

WALL DETAIL
1/2" = 1'-0"

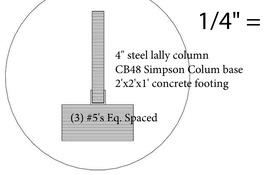

SECTION A
1/4" = 1'-0"

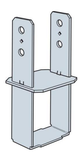

CB48 Simpson Column Base- Column to Slab

CCQ4 Simpson Column Cap- for connection from column to beam and column to basement girder.

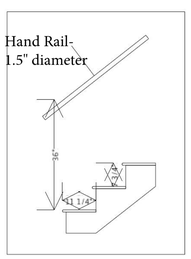

Interior Stair Detail
1/2"=1'-0"

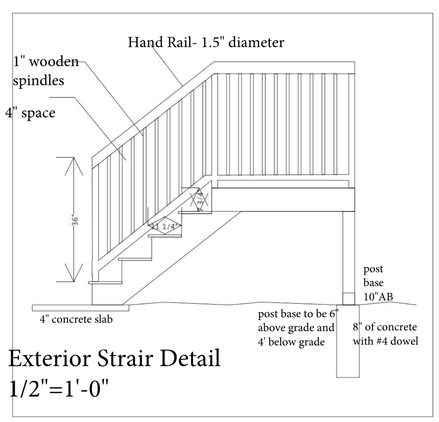

Exterior Strair Detail
1/2"=1'-0"

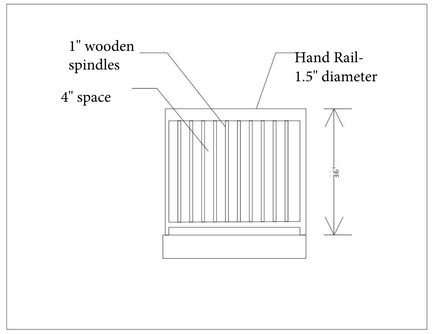

Exterior Deck Detail
1/4"=1'-0"

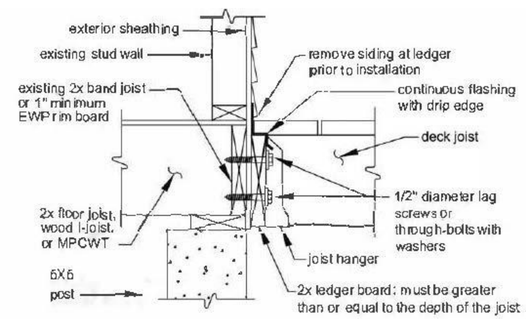

House to Deck Connection- typical
Not to scale

New Single Family
AMENDMENT
5 Monument Street Portland, Maine

Rockwood Design Studio
PO Box 520
Mount Desert, ME 04660
rockwooddesignstudio@gmail.com

Date: 10/24/17
Revised: 11/1/17

ST2