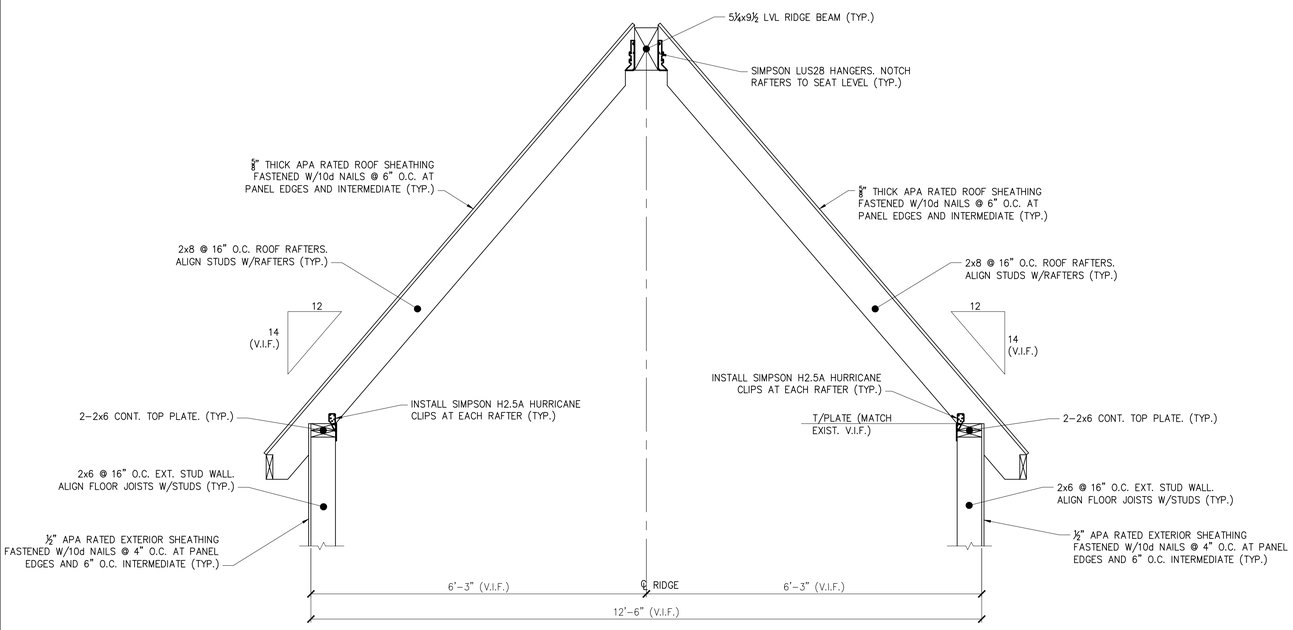


SECTION 3 / S3
3/4" = 1'-0"

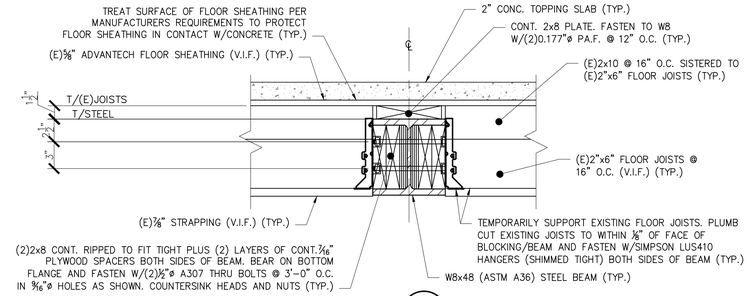


SECTION 5 / S2
1 1/2" = 1'-0"

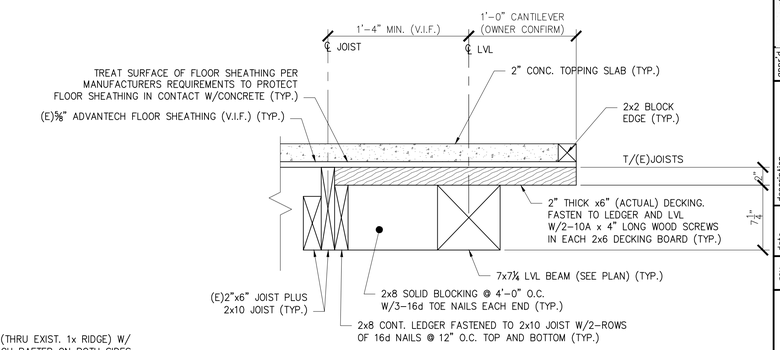


SECTION 6 / S2
1 1/2" = 1'-0"

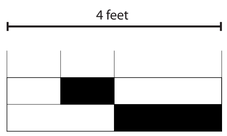


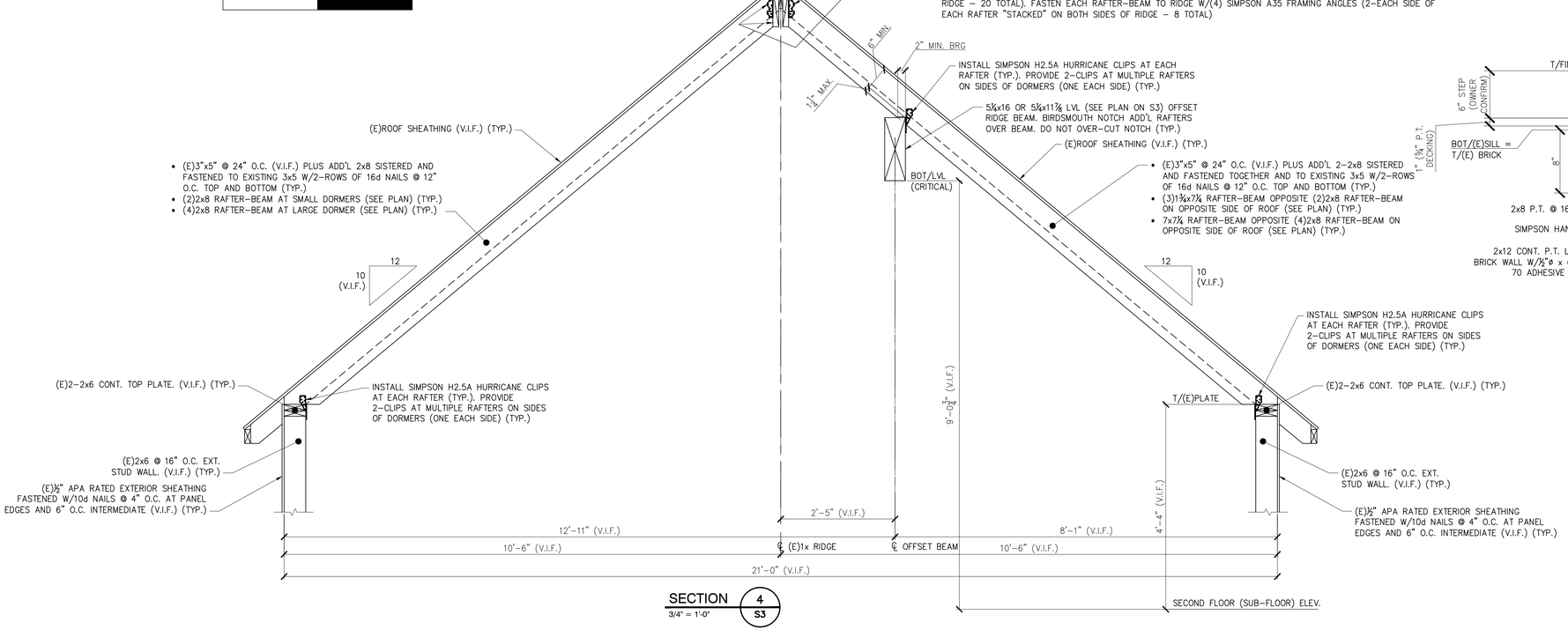


SECTION 4 / S3
3/4" = 1'-0"

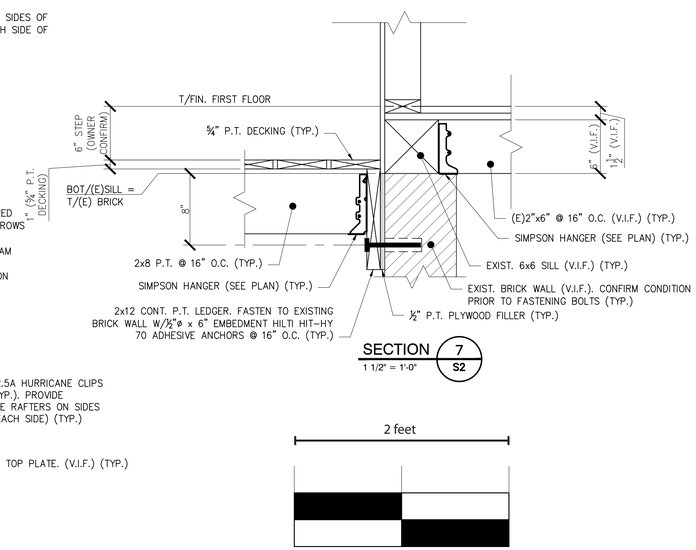


SECTION 7 / S2
1 1/2" = 1'-0"




THESE DRAWINGS HAVE BEEN DEVELOPED BY L&L STRUCTURAL ENGINEERING SERVICES, INC. FOR THE TITLED SET ONLY. THE DRAWINGS ARE THE SOLE PROPERTY OF L&L ENGINEERING SERVICES, INC. AND THEY SHALL NOT BE USED, LENT, COPIED OR ALTERED WITHOUT THE WRITTEN CONSENT OF L&L STRUCTURAL ENGINEERING SERVICES, INC.

L & L STRUCTURAL ENGINEERING SERVICES, INC.
SIX Q STREET
SOUTH PORTLAND, MAINE 04106
PHONE: (207) 767-4830
FAX: (207) 799-5432
EMAIL: JLEASURE@LL-ENG.COM

STATE OF MAINE
JOSEPH H. LEASURE
No. 6242
LICENSED
PROFESSIONAL ENGINEER

| appr'd | description | date | rev. |
|---|---|---|---|
| | | | |

designed by: JHL
drawn by: RJW
checked by: JHL
scale: AS NOTED
date: 02/10/2016
plot date: 02/10/2016
project #: 2015-148

# RESIDENTIAL BUILDING LOCATED AT
65 MERRILL STREET
PORTLAND, ME

BUILDING RENOVATION
SECTIONS AND DETAILS

S5