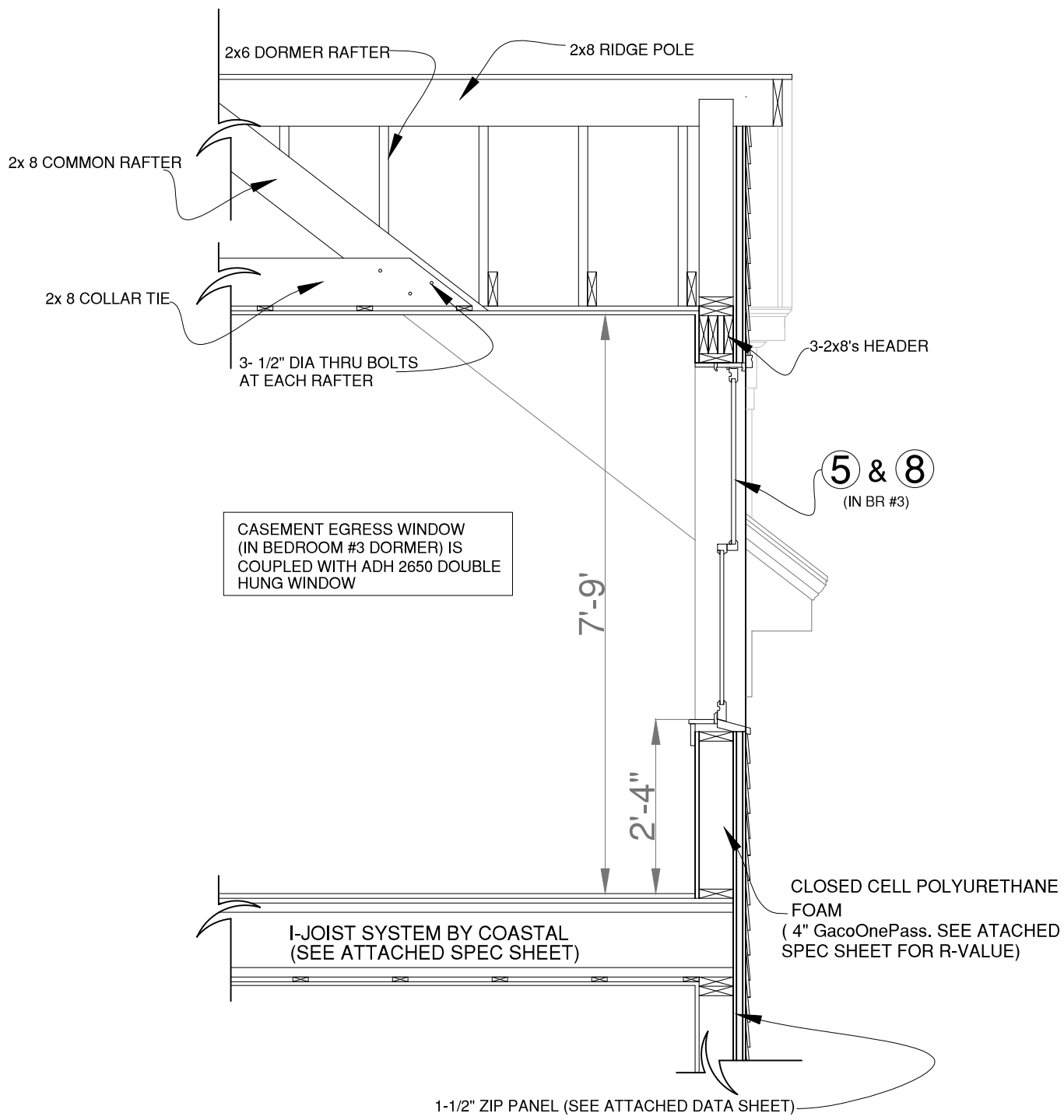

DEKKO LLC

67 MERRILL ST, PORTLAND, ME

DORMER SECTION (B-A)

JUNE 2, 2016

1/2" = 1'-0"

12