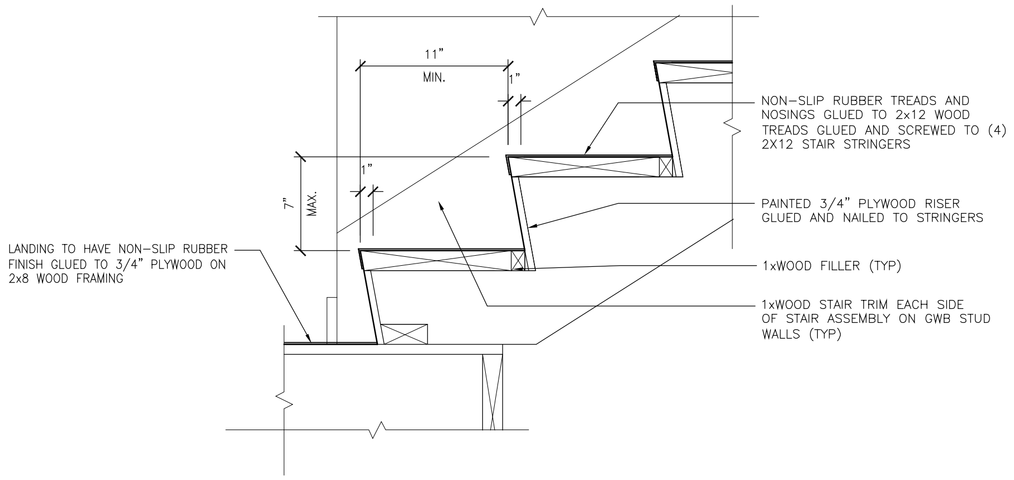

4 SECTION THRU NEW STAIRS
1-1/2"=1'-0"

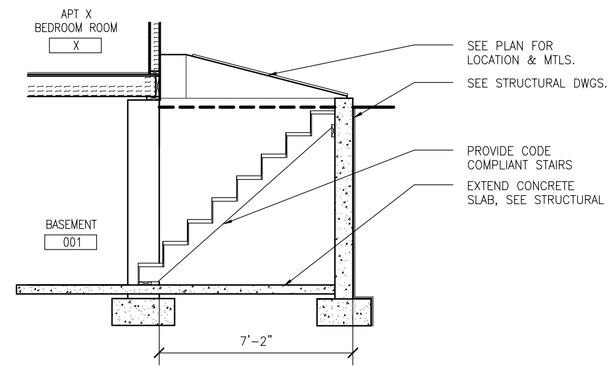

3 SECTION THRU BULKHEAD
1/4"=1'-0"

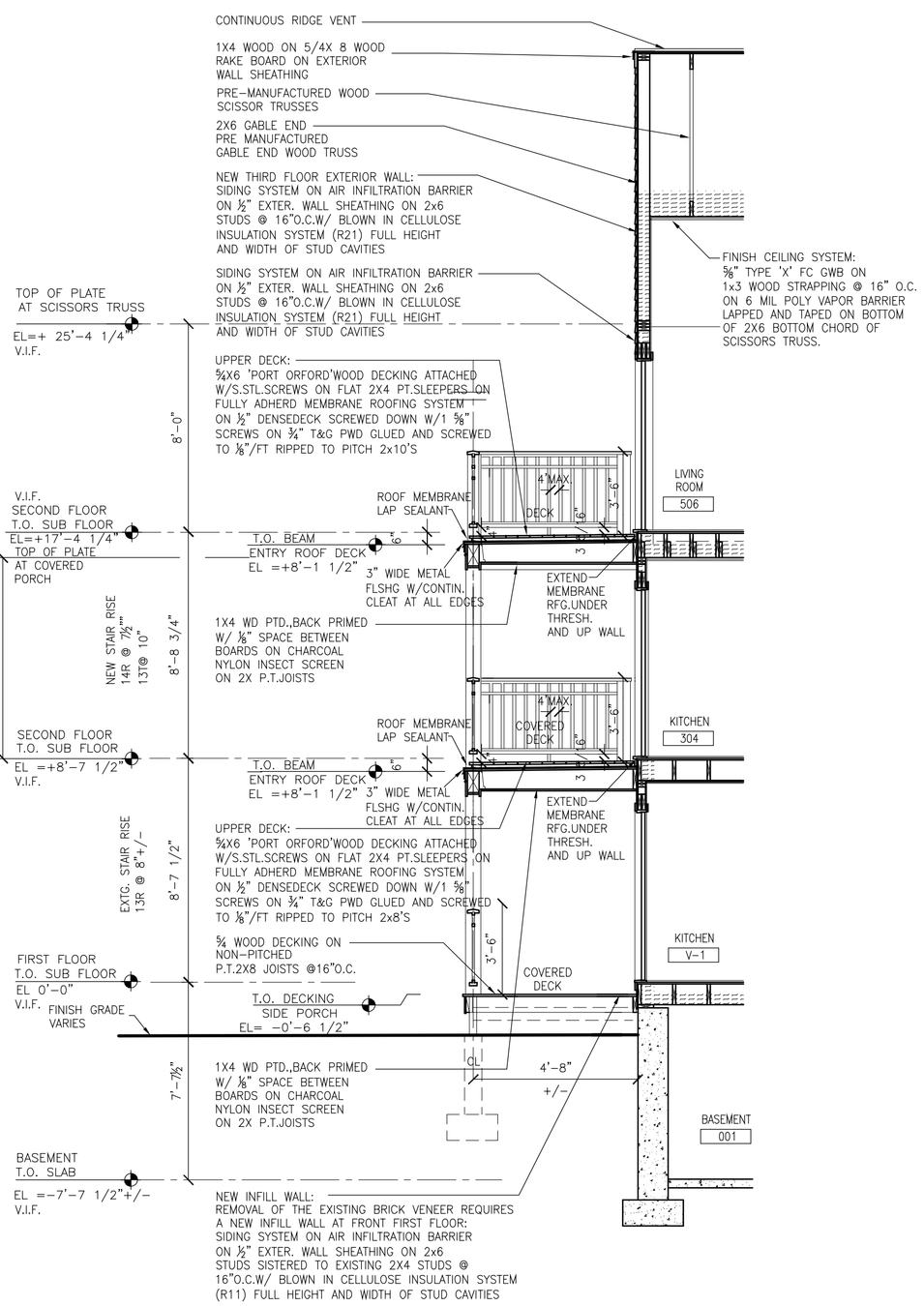

2 SECTION THRU DECK
1/4"=1'-0"

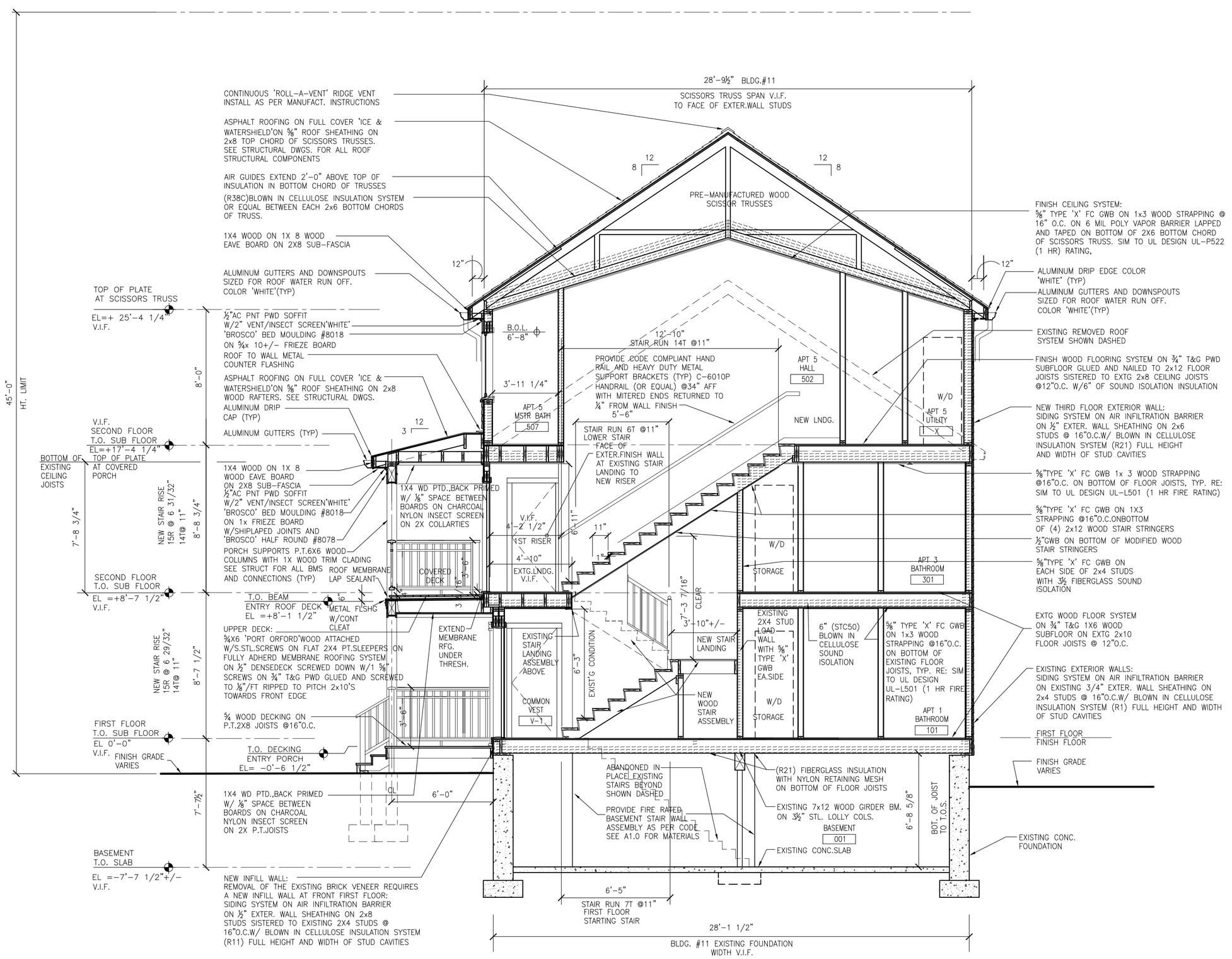

1 SECTION THRU STAIRS
1/4"=1'-0"

BARBÀ+WHEELOCK
ARCHITECTURE
PRESERVATION
DESIGN
500 CONGRESS STREET
PORTLAND, MAINE 04101
FAX 207.772-3667
TEL 207.772-2722

TOOTHAKER (TURNER ST.)
PORTLAND, ME

Title:
11 TURNER BUILDING SECTIONS

Project No: 200508
Date: 3 JANUARY 2006
Revisions:

Issued For: CONSTRUCTION

Drawing No:
A3.1