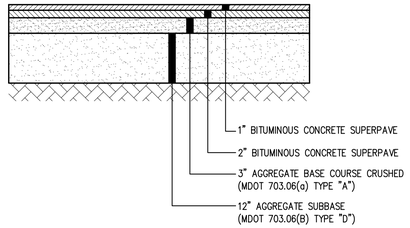

NOTE:
1. COMPACT GRAVEL SUBBASE, BASE COURSE TO 95% OF MAXIMUM DENSITY USING HEAVY ROLLER COMPACTION.
2. CONTRACTOR SHALL SET GRADE STAKES MARKING SUBBASE AND FINISH GRADE ELEVATIONS FOR CONSTRUCTION REFERENCE.

TYPICAL DRIVEWAY SECTION

NTS

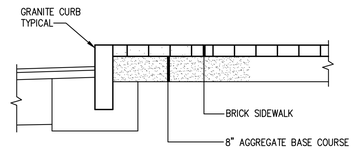

TYPICAL BRICK WALKWAY SECTION

NTS

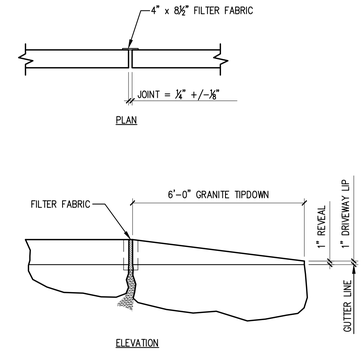

TYPICAL TIPDOWN CURB INSTALLATION

NTS

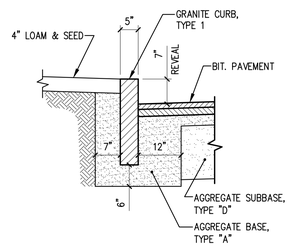

SECTION

INSTALLATION OF CURB

GRANITE CURB DETAIL

NTS

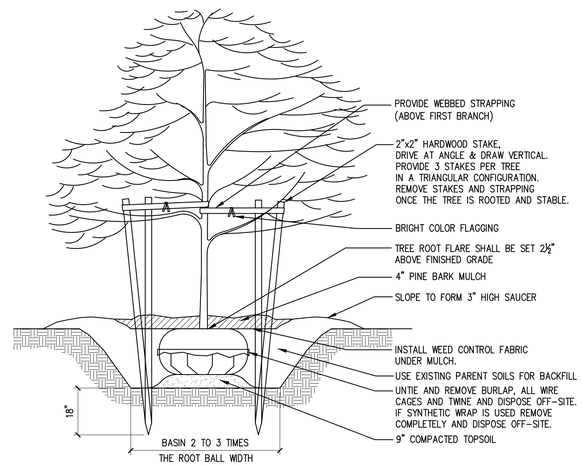

TYPICAL TREE PLANTING DETAIL

N.T.S.

PLANTING NOTES:
1. ALL PLANTINGS WILL BE WATERED TO ACHIEVE 20 GALLONS OF WATER DELIVERED OVER A 30 MINUTE TIME PERIOD PER TREE, WEEKLY THROUGH THE GROWING SEASON (APRIL THROUGH NOVEMBER) FOR THE FIRST 4 YEARS, INCLUDING THE YEAR OF INSTALLATION.
2. ANY AND ALL PLANT MATERIAL DELIVERED TO THE SITE THAT IS DAMAGED OR WOUNDED SHALL BE REFUSED AND UN-DAMAGED MATERIAL SECURED.

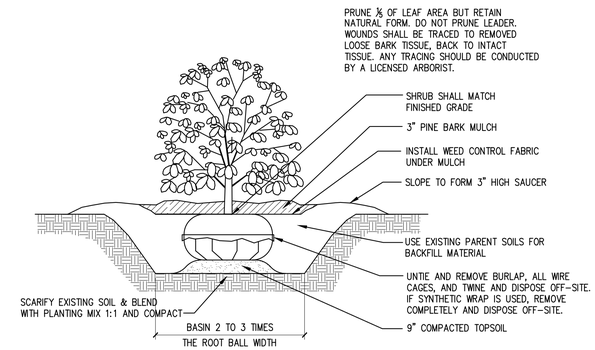

TYPICAL SHRUB PLANTING DETAIL

N.T.S.

TREE AND SHRUB PLANTING DETAILS

NTS

-

NTS

CASCO BAY ENGINEERING
424 Fore Street
Portland, ME 04101
Phone 207.842.2800
Fax 207.842.2828
www.cascobayengineering.com

CLIENT:
LANDMARX CONSTRUCTION
273 PRESUMPSCOT ST
PORTLAND, ME 04103

5 MERRILL STREET
5 MERRILL ST
PORTLAND, ME

PROPOSED BUILDING

ISSUED

No.	DESCRIPTION	DR. BY	CKD. BY	DATE
A	FOR REVIEW	AM	ED	8-25-16

SHEET TITLE:

SITE DETAILS

DESIGNED:	ED
DRAWN:	AR
DATE:	8-8-16
PROJECT NUMBER:	16-127

C200