BRICKS TO BE USED:

NEW CONSTRUCTION:
4"X8" PINE HALL PATHWAY PAVER BRICK, MFG. BY PINE HALL BRICK CO., MADISON, NORTH CAROLINA. LACHANCE ITEM #193623, PINE HALL PATHWAY PAVER BRICK.

REPAIR/MAINTENANCE TO EXISTING BRICK SIDEWALKS: VERMONT PAVER, SUPPLIED BY GAGNE AND SONS. SPECIFICATION NUMBER "VERMONT BACKER BRICK", ITEM NO. #VBBB

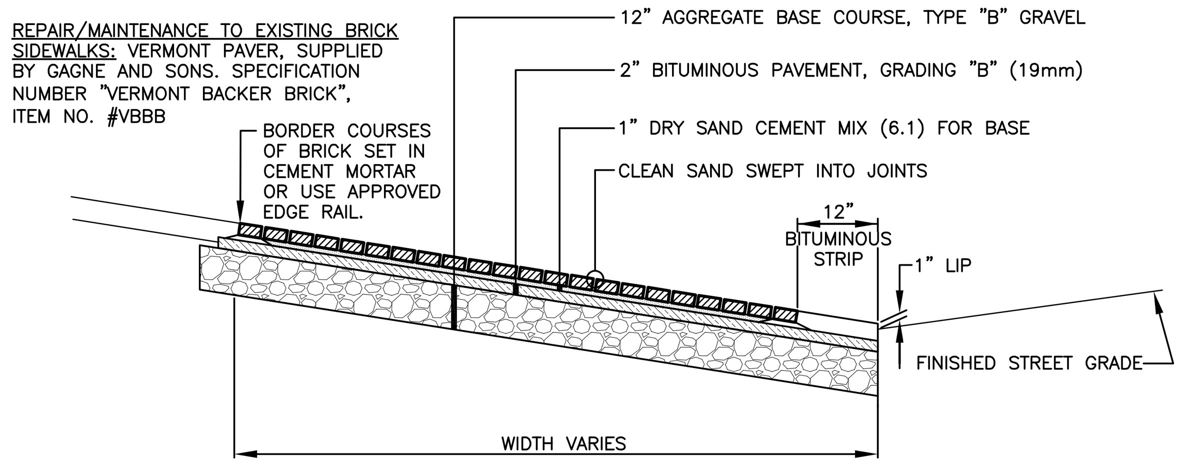

BRICK DRIVEWAY APRON WITH BITUMINOUS BASE
NOT TO SCALE

BRICKS TO BE USED:

NEW CONSTRUCTION:
4"X8" PINE HALL PATHWAY PAVER BRICK, MFG. BY PINE HALL BRICK CO., MADISON, NORTH CAROLINA. LACHANCE ITEM #193623, PINE HALL PATHWAY PAVER BRICK.

REPAIR/MAINTENANCE TO EXISTING BRICK SIDEWALKS: VERMONT PAVER, SUPPLIED BY GAGNE AND SONS. SPECIFICATION NUMBER "VERMONT BACKER BRICK", ITEM NO. #VBBB

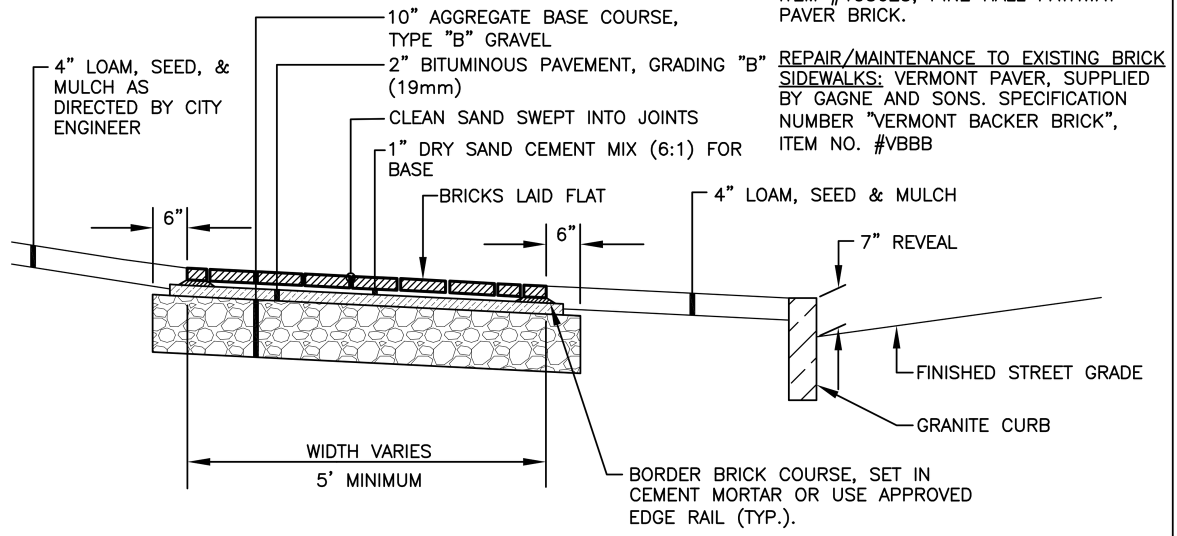

BRICK SIDEWALK WITH BITUMINOUS BASE
NOT TO SCALE

NOTE:
MATCH GRADE OF EXISTING DRIVEWAY AT R.O.W. LINE, EXCEPT WHEN DIRECTED OTHERWISE BY CITY ENGINEER.

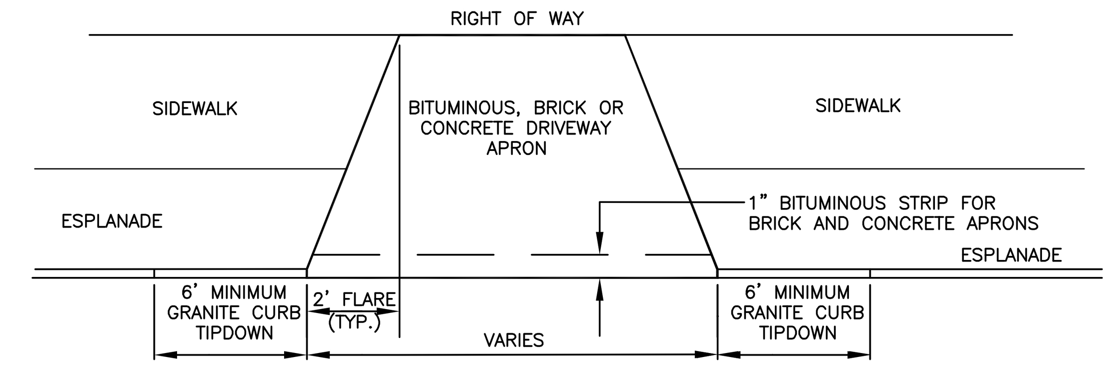

DRIVEWAY APRON LAYOUT
NOT TO SCALE

NOTE:
COMPONENT NO'S: (2) TREE GRATE 8750-0004
MATERIAL: CAST GRAY IRON ASTM A-48, CLASS 35B
FINISH: NO PAINT

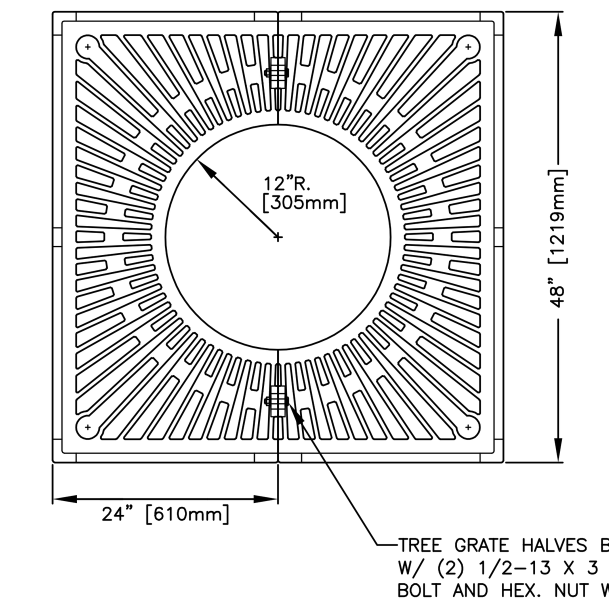

STREET TREE GRATE
NOT TO SCALE

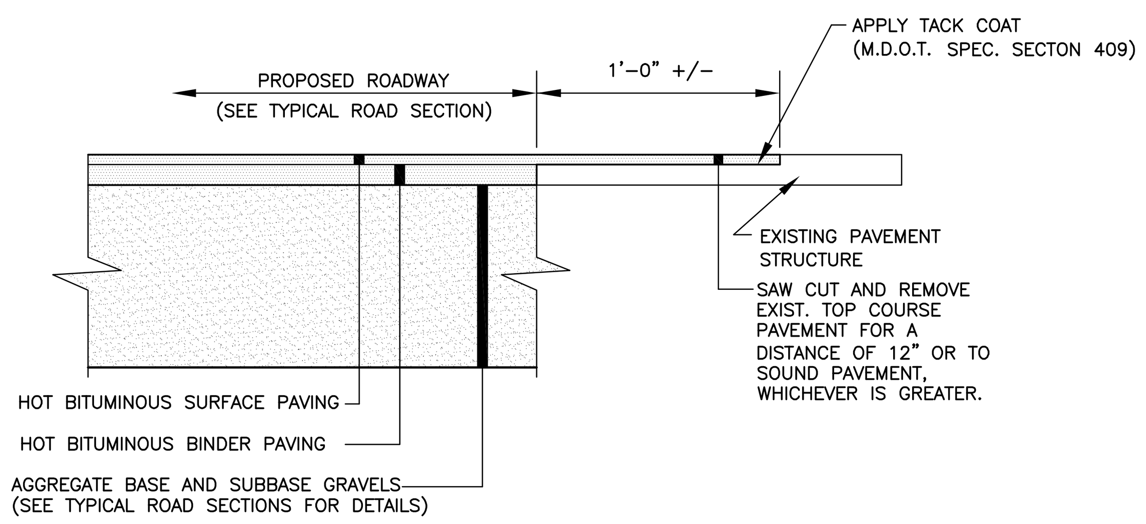

TYPICAL PAVEMENT JOINT
NOT TO SCALE

NOTE:
FILTER COURSE MUST BE A MINERAL SOIL MEETING SPECIFICATION WITHIN TABLE 7.7.3, BELOW.

TABLE 7.7.3– MDOT SPEC FOR AGGREGATE (MDOT #703.01)

SIEVE SIZE	% BY WEIGHT
3/8"	100
#4	95–100
#8	80–100
#16	50–85
#30	25–60
#60	10–30
#100	2–10
#200	0–5 (8–10% PREFERRED)

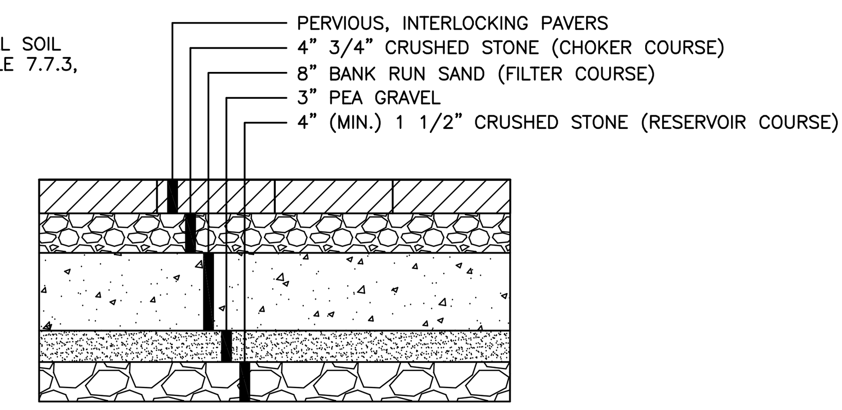

PERVIOUS PAVER SECTION DETAIL
NOT TO SCALE

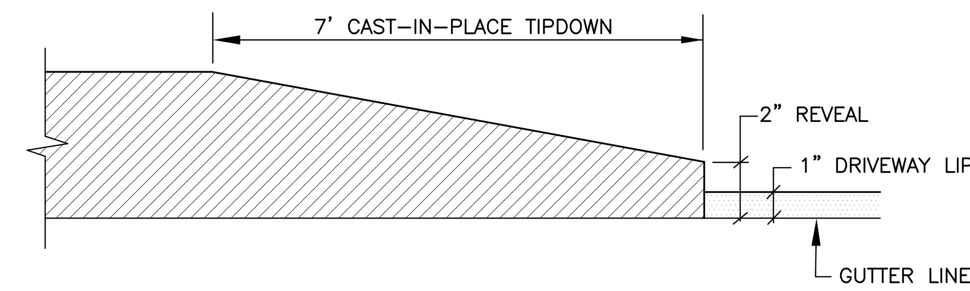

TYPICAL TIPDOWN CURB INSTALLATION
NOT TO SCALE

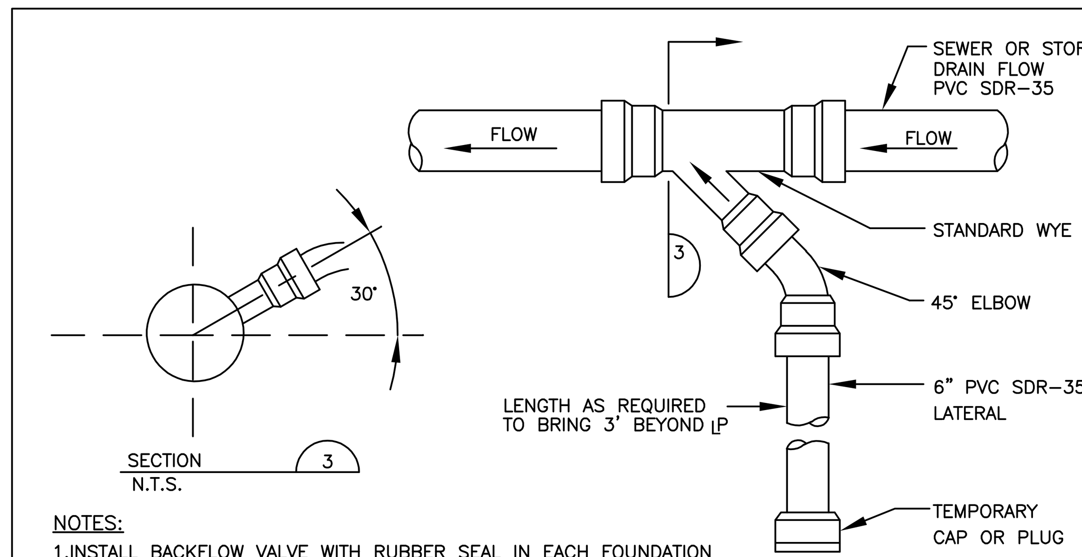

NOTES:
1. INSTALL BACKFLOW VALVE WITH RUBBER SEAL IN EACH FOUNDATION DRAIN SERVICE.
2. IF SUMP PUMP IS UTILIZED INSTALL CHECK VALVE AT SUMP PUMP.

SEWER / FOUNDATION DRAIN SERVICE CONNECTION
NOT TO SCALE

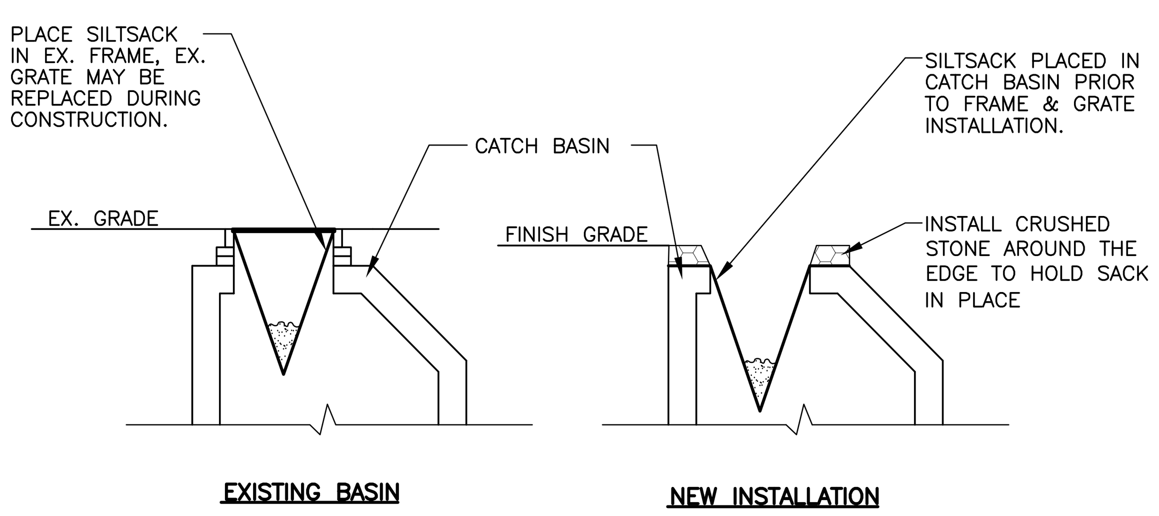

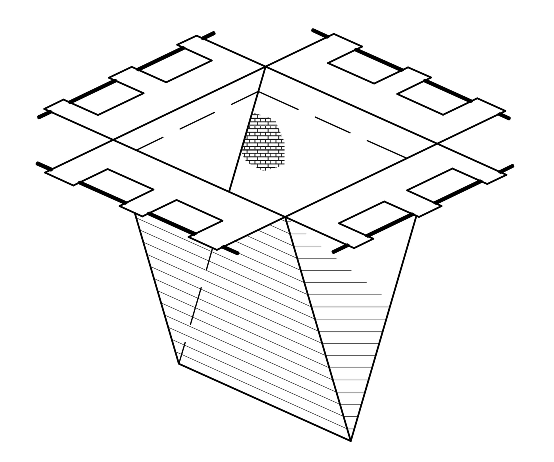

SILT SACK PROTECTION

NOTES:
PRIOR TO FINAL GRADING AND PAVING OPERATIONS BEGIN, A CATCH BASIN INSERT (SUCH AS A SILT SACK OR A DANDY BAG II) MUST BE INSTALLED IN EACH BASIN PER MANUFACTURES INSTRUCTIONS. HAY BALES SHOULD BE REMOVED ONCE INSERTS ARE INSTALLED.

CATCH BASIN EROSION CONTROL INSERT
NOT TO SCALE

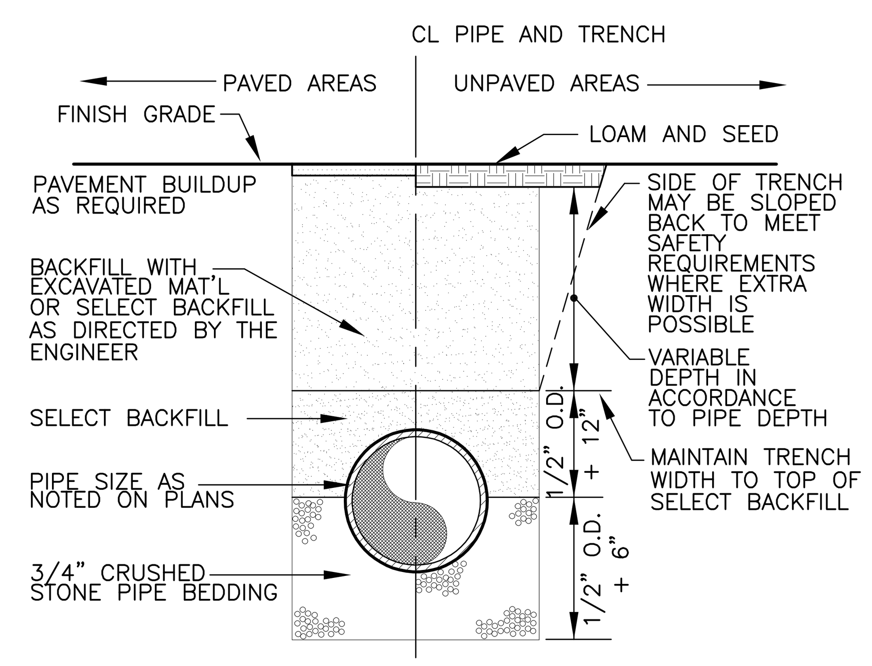

TYPICAL TRENCH SECTION
NOT TO SCALE

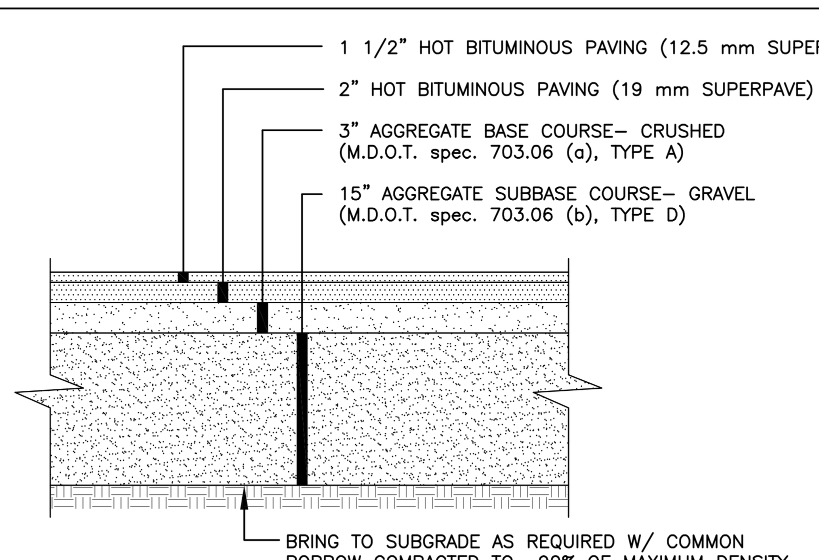

NOTES:
1. COMPACT GRAVEL SUBBASE COURSE TO 92% OF MAXIMUM DENSITY USING HEAVY ROLLER COMPACTION.
2. CONTRACTOR SHALL SET GRADE STAKES MARKING SUBBASE AND FINISH GRADE ELEVATIONS FOR CONSTRUCTION REFERENCE.

CITY OF PORTLAND LOCAL ST. SECTION
NOT TO SCALE

City of Portland Technical Manual

Section 1 - Transportation Systems and Street Design
Adopted 7-19-10 Rev. 6-17-11; 7-21-11

DOWNTOWN RACK

Specifications and Space Use

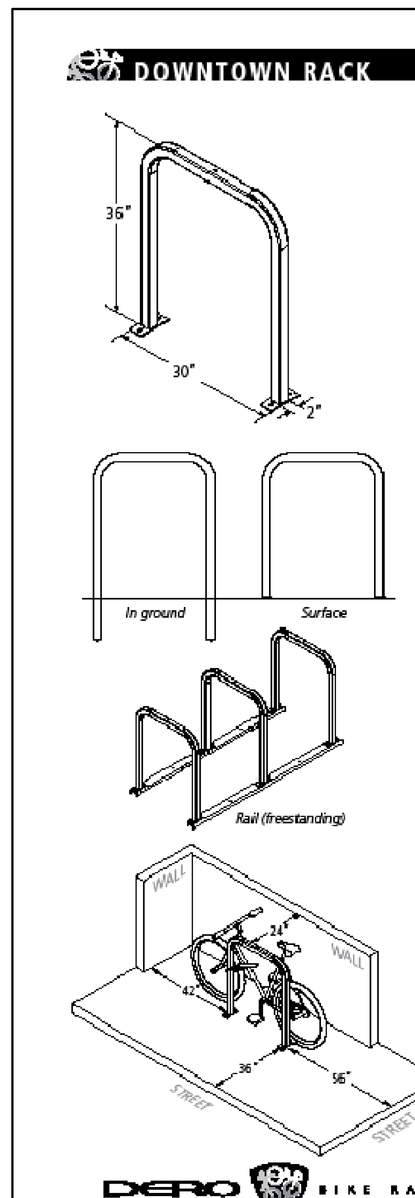

Product — Dero Downtown Rack. As manufactured by Dero Bike Racks

Capacity — 2 Bikes

Materials — 2" x 2" x 3/16" tube

Finishes — An after fabrication hot dipped galvanized finish is standard. 250TGIC powder coat colors, a thermoplastic coating and a stainless steel option are also available.

Our powder coat finish assures a high level of adhesion and durability by following these steps:
1. Sandblast
2. Iron phosphate pretreatment
3. Epoxy primer electrostatically applied
4. Final thick TGIC polyester powder coat

Stainless Steel: 304 grade stainless steel material finished in either a high polished shine or a satin finish.

A rubbery PVC Dip is also available

Installation Methods — **In ground mount** is embedded into concrete base. Specify in ground mount for this option.
Foot Mount has two 2.5"x6"x.25" feet with two anchors per foot. Specify foot mount for this option.
Rail Mounted Downtown Racks are bolted to two parallel rails which can be left freestanding or anchored to the ground. Rails are heavy duty 3"x1.4"x3/16" thick galvanized mounting rails. Specify rail mount for this option.

Space Use and Setbacks — **Wall Setbacks:**
For racks set parallel to a wall:
Minimum: 24"
Recommended: 36"

For racks set perpendicular to a wall:
Minimum: 28"
Recommended: 42"

Distance Between Racks:
Minimum: 24"
Recommended: 36"

Street Setbacks:
Minimum: 24"
Recommended: 36"

www.dero.com 1-800-296-4915

DATE: AUGUST 2009	CITY OF PORTLAND, MAINE TECHNICAL STANDARDS MANUAL	TRANSPORTATION SYSTEMS AND STREET DESIGN SECTION I	FIGURE:
REVISED:	BICYCLE RACK SPECIFICATION - DOWNTOWN RACK		I-34a 69

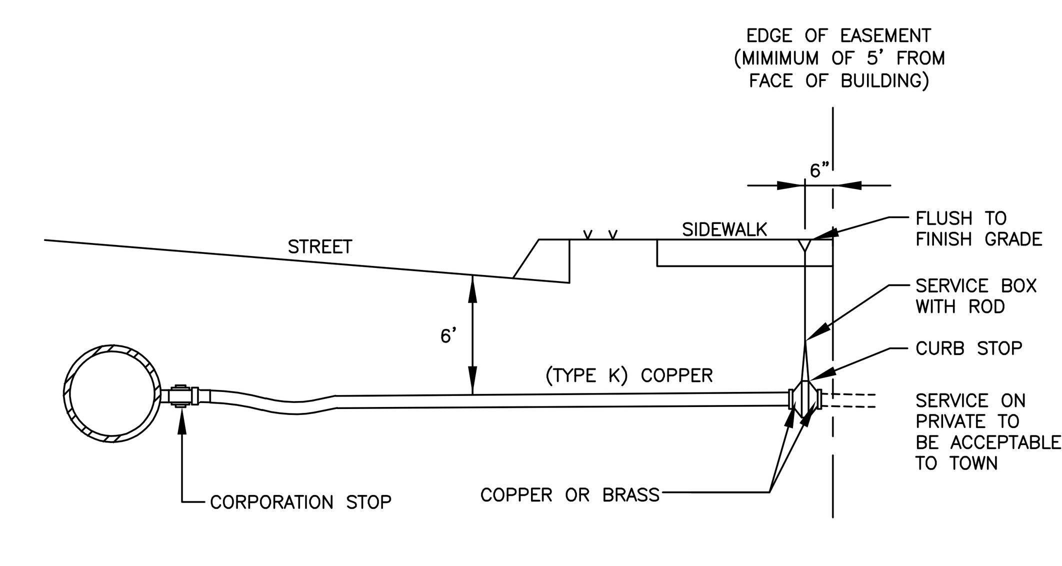

TYPICAL WATER SERVICE CONNECTION
NOT TO SCALE

REVISIONS				
NO.	DATE	DESCRIPTION	DRAWN	APPD.

PROJECT NAME:
SEVEN-UNIT BUILDING
30 MERRILL STREET
PORTLAND MAINE
SHEET NAME: DETAILS

DESIGNED:	Client	PROJECT NO.	16055
DRAWN:	RGM	DRAWING NO.	15215-1PP
CHECKED:	JHW	FIELDBOOK:	
APPROVED:	JHW	SCALE:	
PLAN DATE:	FEB. 23, 2016	DATE ISSUED:	3-15-16

CLIENT/RECORD OWNER:
BANNER PROPERTIES, LLC
126 UNDERWOOD ROAD
FALMOUTH, ME 04105

Plymouth Engineering, Inc.
P.O. Box 46 30 Lower Detroit Road
Plymouth, Maine 04969
Tel: (207) 257-2071 Fax: (207) 257-2130
info@plymouthengineering.com
www.plymouthengineering.com

STATE OF MAINE — JON H. WHITTEN, JR. — No. 10414 — LICENSED PROFESSIONAL ENGINEER

DRAWINGS NOT SEALED ARE FOR PLANNING PURPOSES ONLY AND ARE NOT INTENDED FOR PERMITTING, BIDDING OR CONSTRUCTION

SHEET 4 OF 4

C4

ERROR: syntaxerror
OFFENDING COMMAND: --nostringval--

STACK:

/Title
()
/Subject
(D:20160829161541-04’00’)
/ModDate
()
/Keywords
(PDFCreator Version 0.9.5)
/Creator
(D:20160829161541-04’00’)
/CreationDate
(Jon Whitten)
/Author
-mark-