COPYRIGHT: Reuse or reproduction of the contents of this document is not permitted without written permission of Bild Architecture LLC

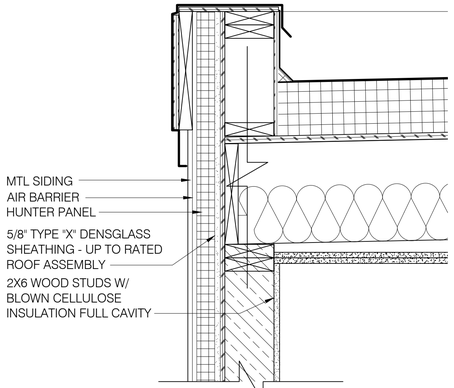

11 A3.1A3.3 — T.O. RATED EXT WALL DETAIL
0 8" SCALE: 1-1/2" = 1'-0"

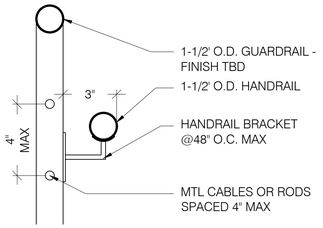

7 — HANDRAIL SECTION
0 4" SCALE: 3" = 1'-0"

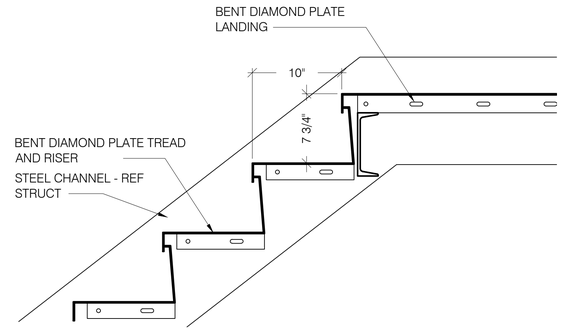

3 A3.2A3.2 — EXTERIOR TREAD/RISER DETAIL
0 8" SCALE: 1-1/2" = 1'-0"

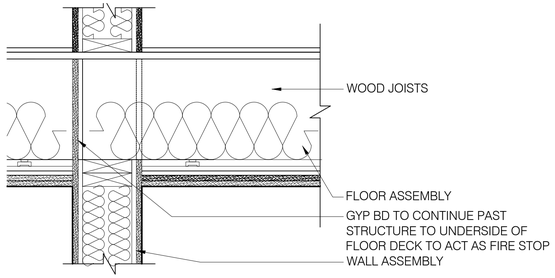

10 A1.1A3.3 — INTERIOR BEARING WALL DETAIL
0 8" SCALE: 1-1/2" = 1'-0"

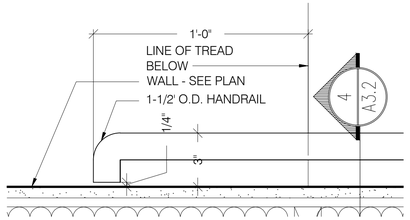

6 — HANDRAIL DETAIL
0 4" SCALE: 3" = 1'-0"

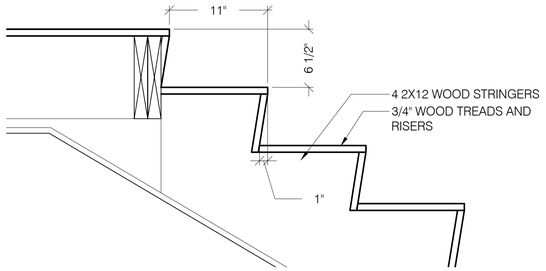

2 A3.1A3.2 — TYP. RISER TREAD DETAIL
0 8" SCALE:1-1/2" = 1'-0"

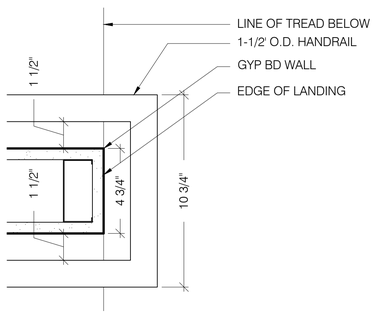

5 — HANDRAIL DETAIL
0 4" SCALE: 3" = 1'-0"

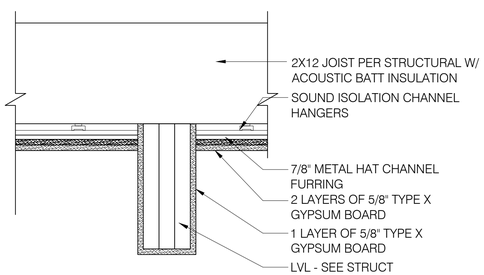

9 A3.1A3.3 — LVL WRAP DETAIL
0 8" SCALE: 1-1/2" = 1'-0"

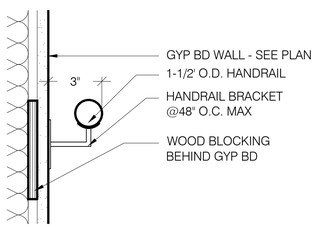

4 — HANDRAIL SECTION
0 4" SCALE: 3" = 1'-0"

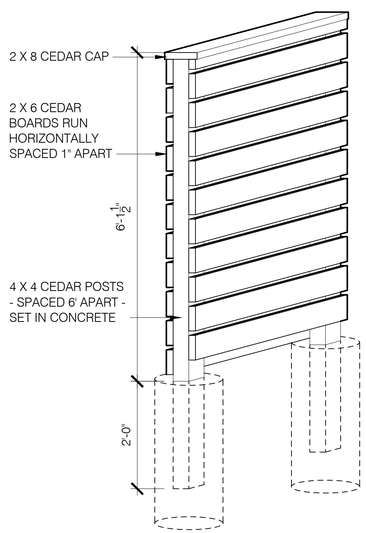

12 A3.1A3.3 — FENCE DETAIL
0 1' - 4" SCALE: 3/4" = 1'-0"

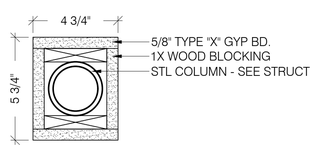

8 A1.1A3.3 — COLUMN WRAP DETAIL
0 4" SCALE: 3" = 1'-0"

1 A1.3A3.2 — STAIR SECTION
0 2'-0" SCALE: 1/2" = 1'-0"

Bild Architecture
PO Box 8235
Portland, ME
04104
207.408.0168
evan@bildarchitecture.com

PROJECT NO. 15018
PROJECT NAME MERRILL STREET PORTLAND, ME

REVISIONS
1 -
2 -
3 -
4 -
5 -

CHECK SET 90%
NOT FOR CONSTRUCTION

DRAWN BY EMW
SHEET TITLE DETAILS

ISSUE DATE 08/23/16
SHEET SCALE 1/4" = 1'-0"

A
3.2