BRIBURN
architecture for life™

28 Maple St · Suite 202
Portland, ME 04101
207-774-8482
www.briburn.com

Inspections Division
Date: 11/20/14

PROJECT MANUAL FOR:

BOGG + KIEFNER RESIDENCE

100 Sheridan Street, Portland, Maine 04101

ISSUED FOR PERMITTING & CONSTRUCTION:
October 1, 2014

Inspections Division
Date: 11/20/14

Inspections Division
Date: 11/20/14

TABLE OF CONTENTS

PART A – SPECIFICATIONS

Division 01 **GENERAL REQUIREMENTS** **5**

01 00 00 General Requirements
01 20 00 Allowances and Alternates

Division 02 **EXISTING CONDITIONS** **7**

02 40 00 Selective Site and Building Demolition

Division 03 **CONCRETE** **7**

03 30 00 Cast-In-Place Concrete (and concrete floor finishing)

Division 04 **MASONRY (NOT APPLICABLE)** **9**

Division 05 **METALS** **10**

05 00 00 Metals (Structural Metal Framing / Metal Fabrications)

Division 06 **WOOD, PLASTICS AND COMPOSITES** **10**

06 10 00 Rough Carpentry
06 20 00 Finish Carpentry
06 40 00 Architectural Woodwork

Division 07 **THERMAL AND MOISTURE PROTECTION** **13**

07 10 00 Dampproofing & Waterproofing
07 20 00 Thermal Protection
07 26 00 Vapor Retarders
07 27 00 Air Barriers
07 46 00 Siding
07 50 00 Membrane Roofing
07 60 00 Flashing & Sheet Metal
07 92 00 Joint Sealants / Tape Flashing

Division 08 **OPENINGS** **17**

08 10 00 Doors and Frames
08 50 00 Windows
08 71 00 Door Hardware

Inspections Division
Date: 11/20/14

Division 09 **FINISHES** ……20

09 29 00 Gypsum Board
09 30 00 Tiling (Floor and Wall)
09 64 00 Wood Flooring
09 65 00 Resilient Flooring
09 90 00 Painting and Coating (Interior and Exterior)

Division 10 **SPECIALTIES** ……22

10 28 00 Toilet, Bath and Laundry Accessories – NOT INCLUDED

Division 11 **EQUIPMENT** ……23

11 31 00 Residential Appliances (Kitchen)

Division 12 **FURNISHINGS** ……23

12 20 00 Window Treatments (by owner)

Division 14 **CONVEYING EQUIPMENT**……23

14 20 00 Elevators

Division 22 **PLUMBING** ……23

22 00 00 Plumbing
22 41 00 Residential Plumbing Fixtures

Division 23 **HEATING, VENTALATING AND AIR CONDITIONING (HVAC)** ……25

23 50 00 Heating System and Equipment

Division 26 **ELECTRICAL / COMMUNICATION** ……26

26 00 00 Electrical / Communication
26 50 00 Lighting

Division 31 **EARTHWORK** ……29

31 00 00 Earthwork

Division 32 **EXTERIOR IMPROVEMENTS** ……29

32 00 00 Exterior Improvements

Division 33 **UTILITIES** ……30

33 00 00 Utilities (Septic system, water and underground electric)

PART B – SUPPLEMENTAL INSTALLATION TECHNIQUES / INSTRUCTIONS

- 100 SHERIDAN STREET HVAC RECOMMENDATIONS MEMO
- AIR BARRIERS–AIRTIGHT DRYWALL APPROACH, BSC INFORMATION SHEET 401

PART A – SPECIFICATIONS

General Requirements – 01 00 00

Drawings and specifications are intended to provide the basis for a completely finished project suitable for the intended use of the Owner. Anything not expressly set forth but which is reasonably implied or necessary for proper performance of this work shall be included. A general description of the project is as follows:

The work includes but is not limited to; a new three story home over slab on grade concrete foundation at the garage and a full basement foundation at the entry (east side). High performance windows and doors and durable materials and finishes are proposed. Walls and roofs will be super insulated.

The Architect encourages at all times the suggestions of the Contractor for modification and changes in the specifications, details, materials and or methods when such changes are warranted and /or as required to meet owners budget. However, any and all such changes including any discrepancies in the contract documents shall be discussed and authorized by Owner and Architect before implementation. Such work shall be done in accordance with the Architect's instructions. Contractor shall be responsible for all costs relating to failure to comply with this requirement.

Prior to submitting his estimate the Contractor shall examine the site and become familiar with all conditions pertaining to the work, and to have verified the drawings.

Prior to ordering material, or performing work, the Contractor shall verify all measurements and be responsible for the correctness of same. Any discrepancies found between actual dimensions and measurements indicated on the drawings shall be reviewed with the owner and Architect before proceeding with the work.

All work shall be installed to conform with 2009 Maine Uniform Building and Energy Code and all other applicable Codes, Ordinances and regulations. The Contractor shall be responsible for scheduling, coordinating, obtaining and paying for all permits, sign-offs, approvals, and the Certificate of Occupancy.

The Contractor shall coordinate schedule of all work with Diane Milliken at Horizon Residential Energy Services (207) 221-3221, as required to coordinate inspections thru-out construction for Energy Star Certification.

The Contractor shall provide manufacturer's product literature and maintenance data for materials necessary for proper operation by Owner. Provide samples for items exposed to view when requested by Architect and as identified in Construction Documents. Provide specific shop drawings, mock-ups, extra stock, certifications, warranties, and other submittals specified in Construction Documents.

The Contractor shall provide a full one-year warranty for all work of this Contract, a two-year labor warranty for the roof installation, and a minimum ten-year product warranty for the roofing materials.

Whenever possible, use locally made/manufactured, environmentally friendly (green), low VOC materials and finishes. Products that perform well and have high-recycled content or other sustainable qualities should be given first consideration.

It is the Owner's intent to start construction as soon as possible. The Contractor shall submit during pricing an estimated schedule for completion of work.

Inspections Division
Date: 11/20/14

Allowances / Alternates – 01 20 00

Allowance #1: Provide $800 for custom steel standoffs at top and bottom of wood column at covered entry, adjacent to Entry 101.

Alternate #1: (Deduct) Delete peel and stick vapor permeable water and air barrier (Blueskin VP100 by Henry Company) and wall sheathing. Replace with integral air barrier and sheathing by ZIP system at exterior walls, and provide ZIP system tape for all edges, seams, intersections and at all window and door head, jamb and sill.

Alternate #2: (Deduct) Delete peel and stick vapor permeable water and air barrier (Blueskin VP100 by Henry Company). Replace with monolytic UV resistant weather resistant barrier (Majvest by Siga or approved equal) over wall sheathing. Install per manufacturer's installation instructions and refer to architectural drawings. Provide Siga WIGLUV vapor permeable flashing tape for all edges, seams, intersections and at all window and door head, jamb and sill.

Alternate #3: (Add) Delete rolled asphalt type roofing by Soprema or equal. Provide EPDM membrane roofing by Carlisle or equal. Follow manufacturers written instructions and recommendations for installation.

Selective Site and Building Demolition – 02 40 00

Demolish and remove existing trees, miscellaneous vegetation, retaining walls and existing pavement as required for new work, coordinate full scope with owner.

Except for items or materials indicated to be reused, salvaged, reinstalled, donated or otherwise indicated to remain, demolished materials shall become the Contractor's property and shall be removed from the site.

Comply with governing EPA notification regulations before starting selective demolition. Comply with hauling and disposal regulations of authorities having jurisdiction.

Cast-In-Place Concrete – 03 30 00

Note: Reference the Construction Drawings for additional information.

Concrete footings, foundation walls, and slabs shall be installed in accordance with specifications and requirements listed on structural drawings. Provide smooth finish for exposed form surfaces and tops of same that are not an integral part of the adjacent floor surface.

Contact Architect after placement of footings, before setting final heights of foundation walls and finish floor heights, to verify actual grades and heights. Maintain minimum frost depths for bottom of footing, as required by code.

Provide openings in formwork to accommodate the work of other trades. Accurately place and secure support items built into forms. Position, support, and secure reinforcement against displacement. Locate and support with metal anchors, runners, bolsters, spacers and hangers as required. Set wire ties so ends are directed into concrete, not toward exposed concrete.

Provide control joints in concrete slab on grade as required to adequately control cracking in surface. Control joints shall be aligned with interior walls where possible and coordinated in field with Architect, see Construction Drawings for additional direction.

Stained and polished concrete floors - Provide 1 ½" stained and polished concrete floor/topping slab at first floor spaces (does not include garage). Aggregate to be 3/8" maximum, Coordinate curing and finishing requirements with Decorative concrete Sub-contractor. Color to be as determined by Owner and Architect during construction. Floors shall be protected immediately following placement of final finish. Verify that concrete substrate conditions are acceptable for product installation in accordance with manufacturer's instructions prior to installation of concrete finishing materials. Ensure surfaces are clean and free of dirt and other foreign matter harmful to performance of concrete finishing materials.

Sequence of Polishing:

1. Perform metal bond grinding steps before partition studs are erected.
2. Perform resin bond polishing steps before partition studs are erected.

Floor Surface Polishing and Treatment:

1. Provide polished concrete floor treatment with consistent finish in entirety of slab indicated by drawings.
2. Apply floor finish prior to installation of fixtures and accessories.
3. Diamond polish concrete floor surfaces with planetary grinding machine. Sequence with course to fine grit.
   A. Comply with manufacturer's recommended polishing grits for each sequence to achieve desired finish level.
   B. Expose aggregate in concrete surface as determined and approved by Owner and Architect.
   C. All concrete surfaces shall be as uniform in appearance as possible with no visible scratches anywhere in surface.
4. Grind and polish edges to a maximum of 1/8" of walls to match field area of floor.
5. Edge into corners with a maximum size of 5" diameter grinding & polishing discs.
6. Apply silicate densifier/hardener per manufacturer's specifications.
7. Remove defects and re-polish defective areas.
8. Finish edges of floor finish adjoining other materials in a clean and sharp manner

Concrete Sealer:

1. No topical sealer allowed.
2. The appearance of any streaking or swirling from the use of topical sealing products will not be accepted. Identification of such issues will require the surface be ground off and re-polished.

Dyed and Polished Concrete:

1. Locate demarcation line between dyed surfaces and other finishes.
2. Apply dye per manufacturer's specifications

Immediately following polishing floor must be covered with vapor barrier and impact protection to protect against any spills, flooding, impact, metal, or any other potentially damaging occurrence. Verify that vapor barrier is nonreactive to the chemical processes involved in the finishing of the concrete. Floor must be kept dry once polishing is complete. It is extremely important that you do not tape the floor! When covering the floor, overlap sheets.

Submit samples of color and finish for stained and polished concrete for review by the Owner & Architect before ordering.

Structural Metal Framing / Metal Fabrications – 05 10 00

Note: Reference the Construction/Structural Drawings for additional information.

Provide structural steel as shown on the structural drawings. All design, fabrication, welding and erection of structural metal shall be in accordance with specifications and requirements listed on structural drawings.

Provide 1 ½" x 1 ½" tube steel support post at typical interior stair guardrail. space minimum 36" and frame flush with wood framing.

Exterior deck and stair railings: Provide ½" x 2 ½" x 2 ½" steel angle stock vertical railing supports (post) at corners, ½" x 2 ½" steel bar stock vertical railing supports (post) at center span & adjacent to walls (space not more than 42" on center), and ½" x 2 ½" steel bar stock handrail at guardrail system at all exterior deck and stair railings. Anchor to wood framing with steel angles and fasteners. Steel bar stock handrails shall be welded to vertical steel post (provide continuous weld on both sides of steel). All steel shall be galvanized and powder coated (color to be chosen by Owner and Architect during construction). Provide stainless steel cable railing system with quick connect hardware or approved equal. Install cable horizontally between steel vertical posts and space cable maximum 3 ½" on center. Include all required terminals (anchors), turnbuckles and fasteners.

Provide custom steel standoffs at top and bottom of wood column at exterior covered entry, adjacent to Entry 101. See allowance #1.

Submit manufacturer's shop drawings for all custom metal fabrications for review by the Owner & Architect before ordering.

Rough Carpentry – 06 10 00

Provide rough framing (floor joists, roof rafters and wall framing) according to structural framing plans and drawings as indicated.

Provide 2 x 4 and 2 x 6 wood frame interior partitions @ 16" on center. Provide wood frame exterior walls per drawings. Frame all corners and intersecting walls to provide maximum insulation coverage. Verify framing requirements with structural drawings.

Provide wood blocking throughout house as required for millwork, cabinetry and toilet accessories in all bathrooms and as required per structural drawings. Review all locations with owner/architect before installing drywall.

Provide Parallam (PSL), microlam or versalam (LVL) and TJI built-up headers, beams and rafters as noted on the structural framing plans and details.

Provide 2x non-toxic MICROPRO treated wood framing/lumber, by Osmose or approved equal, for all lumber that is called out as Pressure treated and exposed to the elements Provide size and locations as shown on drawings. THIS LUMBER SHALL BE USED IN LIEU OF TRADITIONAL PRESSURE TREATED LUMBER.

Provide 2x wolmanized pressure treated wood framing, ACQ (Alkaline Copper Quaternary) treated. For lumber that is called out as Pressure treated but that is not exposed to the elements and isolated from concrete with a capillary break the wood species Tamarak should be used.

Contact information for Tamarak:
Days Lumber
19 Post Rd.
Freeport, Maine 04032
207-869-5055
www.dayshardwood.com

Sheathing - Provide 1/2" Advantech OSB wall sheathing at all exterior walls, 5/8" Advantech OSB tongue and groove roof sheathing at all roofs, and 3/4" tongue and groove sub-flooring (glued) at all floors, unless noted otherwise on drawings. Sheathing and sub-flooring shall be plywood or OSB as required to meet Structural Drawings.

Wood Decking - Provide pre-grooved wood decking with concealed fasteners, at back stair/deck and Terrace 305, at standard random lengths complying with applicable grading rules. Provide matching boards at face of wood deck/porch and at wood treads and risers at stairs. Provide pricing for the following options:

- 1x4, Clear Heartwood, Premium Grade IPE boards (BATU, Canberra, Garapa, Cumaru or approved equal) with transparent finish. All IPE boards shall be free from sound, unsound and milling defects on all four faces and all four edges. All tropical hardwoods shall be sustainably harvested and certified by FSC or SFI.
- 1x6 fused bamboo decking, model dasso.XTR by dasso, smooth surface face up. Seal and finish per manufacturer's written recommendations. Contact dasso for additional information and local dealer (1-855-774-0002, www.dassoXTR.com).

Wood Column - Provide solid 7" diameter douglas fir column at covered entry and Terrace 305, as shown on the plans. See allowance #1 for custom steel standoffs at top and bottom of wood column at covered entry only.

Finish Carpentry – 06 20 00

Exterior door and window trim: See Flashing & Sheet Metal, Section 07 60 00.

Exterior Soffits & Ceilings: Match siding type "B".

Interior Finish Carpentry - Provide Eastern White Pine boards or clear select poplar wood boards with solid painted finish (See Painting, Section 09900) at Interior and/or as described below and as shown on the drawings. All standing and running trim shall be Premium grade as defined by AWI Architectural Woodwork Standards.

- Interior door casings – 5/4 x 3 (1" x 2 ½"nominally), one piece, flat. Refer to drawings for size and configuration.
- Base moldings – 1 x 4 (1" x 2 ½"nominally), one piece, flat with 45 degree bevel at top. Refer to drawings for size and configuration.
- Window Sill – 5/4, single piece. Refer to drawings for size.
- **NOTE:** Provide painted drywall returns at all exterior window and door openings (head and jamb only), see Gypsum Board – 09 29 00 for additional information.

Interior Wood Ceiling - Provide 1x4 tongue and groove vertical grain white oak boards with micro bevel on wood Ceiling at Kitchen 300. Provide #1 select grade, clear Heartwood, with transparent finish. All white oak lumber shall be free from sound, unsound and milling defects on all four faces and all four edges.

Stair ST1: Provide stair, handrail and guardrail per the following. Treads and risers shall be solid wood to match wood flooring thru-out and installed with zero nosing/overhang. Guardrail shall be 3" thick typical and finished to provide smooth uniform finish, see Construction Drawings for additional information and detailing. Handrail shall be 1 ½" diameter, finish or No. 1 white oak, fastened to wall with stainless steel wall brackets by Linnea or approved equal.

Interior Architectural Woodwork – 06 40 00

NOTE: All cabinetry and countertops shown in Master Bathroom 207, Guest Bathroom 208, Kitchen 300 and Powder room 305 is shown for coordination purposes only. Cabinetry shall be purchased and provided by owner/owners representative and installed by general contractor. GC shall coordinate blocking in wall and schedule of cabinetry with adjacent work.

NOTE: All cabinetry/built-in woodwork in Cedar Closet 204, Walk-in Closet 206, Linen Closet adjacent to Guest Bathroom 208, Closet 210, Pantry 301 and Closet 304 is excluded from these drawings and shall be provided by owner/owners representative and installed by general contractor. GC shall coordinate blocking in wall and schedule of cabinetry/millwork with adjacent work.

All grading for Interior Architectural Woodwork provided by General Contractor shall follow AWI Architectural Woodwork Standards. All wood cabinetry shall be Premium Grade.

Provide 14" deep shelf with closet rod below at closet 104. Shelf shall be maple veneer on ¾" plywood with 1 x 2 solid maple nosing. Closet rods to be 1-1/4" diameter chrome rods with chrome escutcheons on either end. Provide blocking in wall as required.

Laundry 203 – Provide plastic laminate countertop and backsplash on ¾" plywood. Countertop shall have 1x2 (3/4" x 1 ½") solid hardwood maple edge with painted finish. Plastic laminate to be chosen by Owner/Architect during construction.

Laundry 203 - Provide custom millwork, cabinetry and shelving per the following:

- Provide plastic laminate countertop and backsplash on ¾" plywood. Countertop shall have 1x2 (3/4" x 1 ½") solid hardwood maple edge with painted finish. Plastic laminate to be chosen by Owner/Architect during construction.
- Provide wall hung cabinet with full overlay doors and flush panels (no recess panel), over washer and dryer as shown on the Construction Drawings. All exposed faces shall have plastic laminate over plywood, interior faces shall be white melamine. Plastic laminate to be chosen by Owner/Architect during construction. Owner to choose handles during construction.

Submit manufacturer's shop drawings for all custom cabinetry for review by the Owner & Architect beef"re ordering.

Inspections Division
Date: 11/20/14

Dampproofing & Waterproofing – 07 10 00

Provide cold-applied asphalt dampproofing at exterior face of lower level foundation walls, as manufactured by Karnak, Celotex, or approved equal. Install in strict conformance with manufacturer's specifications.

Provide drainage and backfill protection sheeting, Delta-MS or approved equal. Install per manufacturer's instructions.

Provide bituminous peel and stick (or approved equal) capillary break across entire top of concrete foundation wall. Coordinate with below grade vapor retarder; see building sections and details for additional information.

Thermal Protection – 07 20 00

Sub Slab Insulation: Provide rigid EPS insulation under new floor slabs. Provide 2 layers of 2" rigid with seams staggered, taped and sealed, under new slab. Provide rigid expanded polystyrene (EPS) insulation installed on inside face of frost walls and under concrete slabs per Construction Drawings. Provide GreenGuard Type IV 25PSI Insulation Board on inside face of foundation walls and GreenGuard Type VI 40PSI Insulation Board under concrete slabs. Provide 2 layers of 2" rigid with seams staggered, taped and sealed, under slab on grade at Storage 001. Provide 1 layer of 2" rigid with seams staggered, taped and sealed, under slab at garage.

Below Grade Walls: Provide mineral wool rigid drainboard on the exterior as shown in drawings. Provide 3 1/2" Flanged Furring Channels by EcoStud or approved equal to accommodate 3 1/2" of expanded poly styrene rigid insulation. Install per manufacturer's instructions.

Exterior Wall and Roof Insulation: Provide dense packed cellulose insulation as shown in the architectural drawings at a density of 3.5 lb/ft.^{3}. Insulation to be NUWOOL cellulose Insulation, CEL-PAK cellulose Insulation, or approved equal. Frame corners and intersecting walls to provide maximum insulation coverage.

Interior Wall Acoustic Insulation: Provide minimum 3 1/2" of dense packed cellulose or approved equal (such as formaldehyde free fiberglass or mineral wool Batt) at interior walls and floors of all bathrooms and bedrooms.

Provide Closed Cell spray-foam insulation within floor and ceiling assembly around any and all voids between framing members and door and window rough openings. See sections and details for additional information and locations.

Vapor Retarders – 07 26 00

Provide minimum 10 mil thick Stego Wrap below grade vapor retarder, Griffolyn Type-65 or approved equal, under concrete slabs on grade.

Vapor retarder system shall be installed continuous under all slabs in strict accordance with the manufacturer's printed instructions. Wrap vapor retarder up vertical face of concrete wall and extend over top of concrete wall, to outside face and seal for capillary break, refer to Construction Drawings for additional information. Tape all seams as recommended by manufacturer.

Use airtight drywall approach for above grade vapor retarder / air barrier. See Part B – Supplemental Installation Techniques / Instructions for BSC Information sheet 401 with instructions on how to seal perimeter of drywall assembly.

Air Barriers – 07 27 00

Provide peel and stick vapor permeable water and air barrier (WRB – water resistant barrier), Blueskin VP100 by Henry Company, fully adhered over wall sheathing and Blueskin® Rf200 Self-Adhesive Ice And Water Barrier, fully adhered over roof sheathing. Install in accordance with manufacturer's instructions and recommendations. See section 07 90 00 for Joint Sealants / Tape Flashing to be used at windows, doors and sills.

See Allowances / Alternates, Section 01 20 00 for alternate air barrier solutions.

Siding – 07 46 00

Siding Type "A" – Standing seam metal siding installed vertically. 12" width panels, typical. Color to be metallic silver by ATAS or approved equal. See exterior building elevations on sheet A201 & A202 for additional information and layout.

Siding Type "B" – Nichiha Architectural wall panels, Vintagewood, color Cedar. See exterior building elevations on sheet A201 & A202 for additional information and layout.

Siding Type "C" – Petrarch Exterior Architectural Wall Panels by CEP Panels, Inc. Color to be Graphite 003, finish to be Riven Slate. See exterior building elevations on sheet A201 & A202 for additional information and layout.

Submit manufacturer's product color samples and product literature for all siding options for review and approval by the Owner & Architect before ordering.

Membrane Roofing – 07 50 00

Provide rolled asphalt type roofing by Soprema or equal, over low-pitched roof. Follow manufacturers written instructions and recommendations. Lap roofing over metal drip edge at fascia, typical, per manufacturer's Instructions. The system would consist of the following components from the deck to the top (finish) surface:
-primer
-Colvent 820 (venting base sheet-allows for movement of wood deck)
-primer
-Self-adhering Cap sheet -Sopralene Stick HR GR (Color to be GREY)

Provide EPDM membrane roofing by Carlisle or equal, at Terrace 305 flooring. Install additional layer of EPDM roofing strips under sleepers for additional puncture resistance. Follow manufacturers written instructions and recommendations for installation.

Flashing & Sheet Metal – 07 60 00

Provide 24 gauge steel drip edge at roof edges as shown on building sections and details. Color to be zinc by Peterson Aluminum (PAC-CLAD) or approved equal.

Provide 24 gauge steel flashing profiles at window head, jamb and sill at windows adjacent to metal siding. Intent is to match metal siding type "A" color.

Provide 24 gauge steel sheet flashing @ all intersections with vertical walls (intersection of low roofs with exterior wall of house). Maximum 2" exposure below siding allowed. Match adjacent siding material color (i.e. window color or wall color).

Provide vent pipe flashing with standard flexible plastic devices to provide tight fit over pipe and positive drainage of water over roofing. Color to match roofing.

Joint Sealant / Tape Flashing – 07 90 00

Sill Gasket: Provide gasketing and capillary break (Sill Seal) at all sill plates. Protecto wrap sill seal guard or approved equal.

Inspections Division
Date: 11/20/14

Sealing Tapes: Provide SIGA Sicrall vapor impermeable sealant tape (on interiors) and Siga WIGLUV permeable window flashing tape at all windows and doors (on exteriors). Refer to drawings for sizes and applications. Provide black color where indicated on drawings and/or where the tape may be visible. Provide flashing tape sill pan, SIGA WIGLUV 230 permeable window flashing tape; Turn up behind window and door to form end dams.

Construction adhesive: Provide Pur Stick from PurFill or approved equal

Expanding foam sealer: Provide Purfill 1G or approved equal

Doors and Frames – 08 10 00

All exterior doors and associated screens and hardware shall be supplied by window manufacturer (Kohltech Window & Entrance Systems) unless noted otherwise below and in the Construction Drawings. Coordinate requirements with window and door manufacturer (See Window and Door Schedule on A201 and Window Section 08 50 00 below for additional information).

Door 101A: Provide Kohltech Traditional Series Entrance Systems, door style F101 (flush door) with matching sidelight style S100. Interior and exterior colors to match typical window colors.

Door 102B: Provide Kohltech Traditional Series Entrance Systems, door style F101 (flush door). Interior and exterior colors to match typical window colors.

Door 302: Provide Kohltech full light door, see window and door schedule on A201. Interior and exterior colors to match typical window colors.

Door 101C & 102C: Provide 1-3/4" insulated, fire rated door with flush panel, model SE100 fire door by Therma-Tru or approved equal. Provide paint finish, color to be chosen by Owner during construction.

Doors 102A: Provide insulated metal overhead sectional garage door as indicated on drawings (1 total). Provide heavy-duty garage door opener and all required hardware. Exterior paint color to match siding type "C".

Typical Interior Door - Provide 1-3/8" solid core door, Model HAMEL, West End Collection, by Masonite Interior Doors. Provide primed white, ready to paint. Provide molded panel, Safe 'n Sound Emerald Solid Core Door.

Submit manufacturer's shop drawings for review by the Architect before ordering doors.

Windows – 08 50 00

Provide high performance vinyl windows and doors by Kohltech Windows & Entrance Systems. Submit manufacturer's shop drawings for review by the Architect before ordering windows and doors. Providing pricing based on the following specifications:

- Supplier - Maine Green Building Supply, 111 Fox Street, Portland, ME 04101
  Contact Information: Jason Peacock, Jason@mainegreenbuilding.com, 207.780.1500
- Glazing: Energlas Plus, triple glazed low E insulated (tempered as noted on window schedule and as required by code)
- U Value (Glazing) / SHGC (glazing - solar heat gain coefficient): U.16 / SHGC.52 + U.18 / SHGC.39
- Screens: fixed screens for all operable windows.
- Interior Color: White
- Exterior Color: Bronze
- Brick Molds: 7/8" brick mold with j-trim and sub-sill.

All exterior doors and associated screens and hardware shall be supplied by window manufacturer unless noted otherwise above (Doors and Frames – 08 10 00) and in the Construction Drawings. Coordinate requirements with window and door manufacturer (See Window and Door Schedule on A601 and comments below for additional information).

Door Hardware – 08 71 00

Provide finish hardware for all doors. All hardware to be satin nickel unless noted otherwise. Install all doors in strict conformance with manufacturer's recommendations.

Note: Verify all keying requirements with owner before installation of all locksets.

Provide non-locking (passage), privacy lock, keyed lock and non-turning (dummy) hardware sets by Schlage. Provide decorative Century style rose and Latitude lever. Finish shall be satin nickel. See hardware sets below for type.

Provide the following hardware sets:

- H1 –Lockset for exterior swing door 101A, 102B and 302 (by window manufacturer)
  - Door Stop: Sugatsune door stop DSD-02/L, Stainless Steel, 1 per door, floor mount
- H2 –Lockset for Door 101C and 102C
  - Keyed lock: 1 pair, Model # F51 LAT 619 CEN
  - Hinge: Hager 700, 4 ½ x 4 ½, 3-knuckle, full mortise, flat button tips & matching plug, 1 ½ pair
  - Door Stop: Sugatsune door stop DSD-02/L, Stainless Steel, 1 per door, floor mount
- H3 – Passage Set for Door 101B, 103, 202A and 306A
  - Non-locking (passage): 1 pair, Model # F10 LAT 619 CEN
  - Hinge: Hager 700, 3 ½ x 3 ½, 3-knuckle, full mortise, flat button tips & matching plug, 1 ½ pair
  - Door Stop: Sugatsune door stop DSD-02/L, Stainless Steel, 1 per door, floor mount
- H4 – Privacy Set
  - Privacy lock: 1 pair, Model # F40 LAT 619 CEN
  - Hinge: Hager 700, 3 ½ x 3 ½, 3-knuckle, full mortise, flat button tips & matching plug, 1 ½ pair
  - Door Stop: Sugatsune door stop DSD-02/L, Stainless Steel, 1 per door, floor mount
- H5 – Closet Set (Dummy) for Door 208B, 210 and 300
  - Non-turning (dummy): 1 pair, Model # F170 LAT 619 CEN
  - Ball Catch with Strike: Emtek 8802, 1 per door (or equal)
  - Hinge: Hager 700, 3 ½ x 3 ½, 3-knuckle, full mortise, flat button tips & matching plug, 1 ½ pair
  - Door Stop: Sugatsune door stop DSD-02/L, Stainless Steel, 1 per door, floor mount
- H6 – Bypass Door Set for Door 104
  - Flush Pull: Emtek, Rectangular Flush Pull, 2201, one side
  - Sliding door fittings and Track: TBD, 1 set
- H7 – Pocket Door Passage Set (for typical interior door unless noted otherwise)
  - Flush Pull: Emtek, Rectangular Flush Pull, 2201, both sides
  - Edge Pull: Emtek, Edge Pull, 2221, 1 per door
  - Sliding door fittings and Track: Hafele Hawa Junior 80/B 940.80.002, 1 set
  - Upper track: Hafele 407.56.886, clear anodized aluminum
  - Guide rail: Hafele 940.41.130, black plastic, 1 each door
  - Cover Cap: Hafele 940.80.020, 1 each
- H8 – Pocket Door Privacy Set for Door 206A, 207 and 305
  - Pocket Door Lock: Linnea, PL160S-PR, Rectangular Pocket Door Lock
  - Edge Pull: Emtek, Edge Pull, 2221, 1 per door
  - Sliding door fittings and Track: Hafele Hawa Junior 80/B 940.80.002, 1 set
  - Upper track: Hafele 407.56.886, clear anodized aluminum
  - Guide rail: Hafele 940.41.130, black plastic, 1 each door
  - Cover Cap: Hafele 940.80.020, 1 each
- H9 – Barn Door Set for Door 306B
  - Flush Pull: Emtek, Rectangular Flush Pull, 2201, two sides
  - Sliding door fittings and Track: TBD, 1 set

Gypsum Board – 09 29 00

Provide 5/8" gypsum drywall (ASTM C 36) at interior walls, partitions, and ceilings, as called for on the drawings. Intent is for all interior walls and ceilings to be painted gypsum board unless noted otherwise in this Project Manual or on the drawings.

Provide 5/8" Type X gypsum drywall at garage ceiling and walls as required for fire rating between garage and house. Tape all seams and fire caulk all penetrations.

Provide gypsum drywall accessory materials of type and grade recommended by the manufacturer of the gypsum drywall panels as required by conditions. Provide screw type as recommended by panel manufacturer.

Apply joint tape and joint compound at joints, both directions, between gypsum boards. Apply compound at accessory flanges, penetrations, fastener heads and surface defects. Except as otherwise specified, apply compound in 2 or 3 coats (plus pre-filling of cracks where recommended by manufacturer); sand or sponge after last coat as recommended by manufacturer.

Provide 5/8" water resistant gypsum drywall (ASTM C 630) at bathrooms. Gypsum cement based products are not acceptable.

Provide 5/8" glass mesh mortar backer board (wonderboard) at shower and steam room walls.

Provide only stainless steel or high tensile strength aluminum fasteners.

Provide 6-mil polyethylene film waterproofing membrane behind wonderboard. Seal at all laps.
Treat joints and fastener heads in water-resistant face and cementitious tile backer boards using water resistant joint compound to comply with panel and water resistant joint compound manufacturer's directions. Use products by U.S. Gypsum, or equal. Tape, finish, and sand in strict conformance with manufacturer's specifications.

Provide Level 3 finish where drywall would normally be concealed from view in the finished work and surfaces to receive mechanically secured or adhesive applied finishes. Tape at joints and interior angles embedded in joint compound; pre-fill of cracks if recommended by compound manufacturer; two layers of joint compound applied over tape, fastener heads and accessories, sanded or sponged as required after final two coats; surface free of excess joint compound, tool marks and ridges.

Provide Level 4 finish where all gypsum drywall is exposed to view and to receive paint or similar finishes. Tape at joint and interior angles embedded in joint compound; pre-fill of cracks if recommended by compound manufacturer; three separate layers of joint compound applied over tape, fastener heads and accessories, sanded or sponged as required after final two coats; surface free of excess joint compound, tool marks and ridges.

Provide gypsum drywall returns at head and jambs at all exterior windows and doors, unless noted otherwise.

Provide manufacturer's standard metal trim accessories, beaded type with face flanges for concealment in joint compound. Utilize corner beads at external corners. Utilize edge trim where edge of gypsum board would otherwise be exposed or semi-exposed; L-type for tight abutment at edges, otherwise U-type except special kerf-type where kerf is provided in adjoining work.

Floor and Wall Tile – 09 30 00

Includes ceramic tile, porcelain tile and stone tile. Provide only mildew-resistant silicone material.

Note: Contractor to include allowance to cover cost of installation of all wall and floor tiles throughout. Contractor shall coordinate location and quantity with floor plans, interior elevations, finish schedule and owner. Owner to choose, purchase and deliver all wall and floor tile during construction.

Provide all leveling and setting materials, adhesive, grouting materials and sealers including, but not limited to the following:

A. Cement mortar and grout: ANSI A108.1
B. Dry-set mortar: ANSI A118.1
C. Latex-Portland cement mortar: ANSI A118.4
D. Organic tile adhesive: ANSI A 136.1; Type I water-resistant only.
E. Epoxy mortar: ANSI A118.3, TCA formula AAR-II
F. Latex grout: Factory blend of portland cement and latex additives.
G. Single-component sealants: ASTM C 920, Type S, Grade NS (NT for use in joints in non-traffic areas).

Provide installation and clean-up tile in accordance with applicable ANSI standards and manufacturer's Instructions. Install in conformance with TCA's "Handbook for Ceramic Tile Installation", latest edition.

Wood Flooring – 09 64 00

Provide ¾" x 2 ¼" T&G wood flooring, end matched, with manufacturer's standard channeling on back face of each strip. See architectural drawings and finish schedule for extent. Owner to choose wood type and finish during construction (Provide allowance based on white oak).

Provide standard random lengths complying with applicable grading rules. Do not proceed with installation until spaces have been enclosed and are at the approximate humidity condition planned for occupancy. Condition wood for a minimum of five (5) days prior to start of installation. At time of delivery, limit average moisture content of wood flooring to 10%, with 12% maximum for any piece. At time of installation, all flooring must be between 8 and 12% moisture content. Adhere all flooring to concrete and/or plywood underlayment, in accordance with NOFMA recommendations.

Provide expansion space at walls and other obstructions and terminations of flooring, not less than 3/8" unless otherwise shown on the drawings. Lightly machine sand installed unfinished flooring to remove offsets and non-level conditions, ridges, cups, and marks which would be visible after finishing.

Provide finishing of wood floors in the field. Provide three coats clear, Vermont Natural Coatings Polywhey floor sealer and finish. Prepare finished sample 6" x 12" for review by the Owner & Architect before proceeding with staining and finishing of wood flooring. Burnish slightly, vacuum and tack between coats. Burnish final coat slightly. Protect all wood flooring and stair treads and risers as required throughout construction and until final occupancy or as otherwise directed by the Architect.

Provide wood threshold/transitions under doors as required by floor material changes.

Provide solid wood boards at interior stair treads and risers, minimum ¾" thick. Wood species/type and finish to match flooring.

Resilient Flooring – 09 65 00

Provide linoleum floor covering, see architectural drawings and finish schedule for extent. Provide Marmoleum by Forbo Flooring Systems. Owner to choose type and color during construction.

Provide all leveling and setting materials, adhesive, grouting materials and sealers. Provide installation and clean-up in accordance with applicable ANSI standards and manufacturer's Instructions.

Painting and Coating – 09 90 00

Install all paint products in strict conformance with manufacturer's recommendations. Prep all surfaces to receive paint, stain, or clear finishes as recommended by product manufacturers.

Provide prime coat and at least two finish coats of paint, sanded between coats, to interior gypsum board wall surfaces, window and door casings and wood base moldings.

- Ceilings: flat finish.
- Walls: eggshell finish
- Trim: semi-gloss finish

Use ultra low VOC paint products by ICI, Benjamin Moore, Pratt and Lambert, or approved equal. Three interior colors may be selected.

For interior wood floors: Vermont Natural Coatings Polywhey floor sealer and finish. 1 coat sealer, 3 coats Satin finish 3500. Sand between sealer and finish coats.

Provide all exterior decking and ceilings with two coats of transparent wood preservative (transparent stain) by Sikkens or approved equal, applied as recommended by manufacturer.

Toilet, Bath and Laundry Accessories – 10 28 00

Note: Contractor to include allowance to cover cost of installation of all toilet, bath and laundry accessories throughout. Contractor shall coordinate location and quantity with floor plans, interior elevations, finish schedule and owner. Owner to choose, purchase and deliver all toilet, bath and laundry accessories during construction.

Provide anchors, bolts, and other necessary anchorages, and attach accessories securely to walls and partitions in locations as shown or directed by Owner/Architect.

Residential Appliances – 11 31 00

Note: Contractor to include allowance to cover cost of installation of all residential appliances. Contractor shall coordinate location and quantity with floor plans, interior elevations, finish schedule and owner (a partial list is included for coordination purposes below). Owner to choose, purchase and deliver all residential appliances during construction.

- Refrigerator: Kenmore Elite 25 cu. Ft. french door refrigerator 7230, model 72303, stainless steel finish.
- Range: Kenmore 4.6 cu. Ft. Electric slide-in range 4253 (4 burner), model 4253, stainless steel finish.
- Hood: Kenmore 30" chimney range hood (NON-DUCTED), 270 CFM, model 50303.
- Dishwasher: Bosch 24" 800 Series built-in dishwasher, model SHE68T55UC, stainless steel finish.

Plumbing – 22 00 00

Provide complete plumbing system as required to make the system fully operable and in full compliance with all code and other requirements. Work includes, but is not limited to, the following:

A. Connections to existing natural gas, sanitary sewer and city water. Coordinate location under or adjacent to Sheridan Street. Conform to all requirements of authorities having jurisdiction.
B. Hot and cold water systems.
C. Plumbing fixtures as indicated.
D. Plumbing connections to all fixtures.
E. All piping, fittings, connections, accessories and incidental items necessary to complete the intended work and to assure full compliance with all code and other requirements.
F. Radon Piping – Connect to underslab piping per Maine Model Radon Standard (2006 ASTM 1465).
G. Floor drain in garage with oil/water separator.

Inspections Division
Date: 11/20/14

It is not the intent of Drawings or Specifications to detail or indicate all piping, fittings, hangers, or other accessories necessary for complete installation. It is the Contractors responsibility to provide all items necessary for first class installation in full compliance with all Code and other requirements.

Provide all plumbing fixtures, sinks, faucets, shower components, etc. as required per the floor plans. Provide all connections and accessories required for installation of all fixtures. Install hook-ups and connections for all appliances, in Kitchen and Laundry/Utility.

Provide soil and waste pipe Schedule 40 PVC. (Provide price for schedule 40 ABS plumbing as an alternative.) Note: Provide only dark grey or black for vent pipes above rooflines.

Provide Type K Domestic water piping (or approved PEX distribution) for all buried piping, installed with no buried joints.

Provide gas piping conforming to most stringent applicable AGA and Code requirements.

Provide clean-outs for all soil and waste piping with convenient access.

Provide all necessary valves, etc. as required by Code and specifications. No fittings shall be buried.

All tubing and piping shall be pressure tested before, during and after the concrete pour.

Provide pipe hangers and supports designed for purpose and of type and capacity required for particular location.

Provide sleeves for all piping penetrating concrete.

Provide two exterior hose bibs with cold weather valves located inside garage (see floor plan for location) and one additional hose bib to be located by Owner in field.

Provide hard drawn Type L Domestic water piping or approved PEX distribution for locations not buried.

Provide shut off valves for hot and cold water supplies to each fixture.

Provide chrome-plated valves, drains, piping, and escutcheon plates, for water closets and within vanities and cabinets where applicable.

Provide traps for all fixtures as required by code. Trap each fixture separately, keeping all trap screws below waterline. Vent each trap.

Pex tubing may be used in lieu of copper piping were allowed by code.

Provide Dow Styrofoam SM, 2 inches thick, minimum for all vertically oriented below grade insulation.

Provide single –throw supply valve type hose connection for clothes washing machine, to control hot and cold water simultaneously.

Provide passive radon reduction system underslab at garage and basement. Provide single vent to roof. Coordinate location of vertical vent pipe with interior wall layout. Radon pipe size and location shall be installed per 2009 Maine Uniform Building and Energy Code.

Install drain pan for all water storage tanks /electric hot water heater.

Install floor drain centered in garage as shown on the floor plans. Floor drain shall be connected to oil / water separator as required by code and connected to city sewer.

Residential Plumbing Fixtures – 22 41 00

Purchase and Install the following Fixtures (Provide all accessories and components required for a complete installation):

- Kitchen Sink: Kraus KBU22 32 ¼" undermount 50/50 double bowl 16 gauge stainless steel kitchen sink.
- Kitchen Sink Faucet: Moen S7597C Chrome pullout spray high-arc kitchen faucet, 90 degree collection. Provide Low flow kit.
- Toilet: Toto CST405MF#01 Cotton Rowan 1.0 AND 1.6 GPF two piece round toilet, provide matching softclose seat.
- Bathroom Sink: American Standard 0426.000.020 white studio 13 ½" undermount porcelain bathroom sink.
- Bathroom Faucet: Grohe 32138001 Starlight chrome Concetto bathroom faucet with swivel spout and silkmove ceramic disc cartridge (includes drain assembley). Provide Low flow kit.
- Master Bathroom Shower: Grohe GR-PB010SC Starlight Chrome Concetto pressure balanced shower trim with multi-function showerhead with slide bar, hose, soap dish and lever handle.
- Guest Bathroom Shower: Grohe 35009001 Starlight Chrome Concetto pressure balanced tub and shower with valve trim diverter, tub spout, showerhead, shower arm & flange – less valve.
- Tub: Sterling 71121120-47 Almond Ensemble 60" x 32" soaking bath – left hand drain. Color to be white.

G.C. shall provide full product literature for owner review and sign-off prior to purchasing plumbing fixtures.

Heating System and Equipment – 23 50 00

Work includes, but is not limited to, the following:

A. Heating and cooling systems
B. Thermostats and low voltage control wiring.
C. Electric towel bars.
D. Bathroom ventilation fans and ductwork.
E. Dryer vent system.
F. ERV (Energy Recovery Ventilation) system
G. Hot Water Heater

Refer to attached document (100 SHERIDAN STREET HVAC RECOMMENDATIONS MEMO) for complete heating and cooling systems, hot water system and ventilation systems (ERV-Energy Recovery Ventilation). All systems shall be fully operable, and in full compliance with all code and other requirements, to serve new house. Final design and installation of heating system will be by HVAC sub-Contractor. Contractor to submit specifications and heat loss calculations for proposed mechanical equipment and system with bid proposal, for review by the Owner, Architect and Mechanical Engineer. Installation to meet or exceed industry standards.

Provide dryer vent system exhausted directly to outdoors.

Provide American Aldes, Cape Backdraft Dampers at each exhaust duct.

Provide Bathroom ventilation fans by Panasonic (or approved equal) and ductwork in full compliance with ASHRAE STD 62.2.

It is not the intent of Drawings or Specifications to detail or indicate all controls, ducting, piping, wiring, fittings, hangers or other accessories necessary for complete installation. It is Contractor's responsibility to provide all items necessary for first class installation in full compliance with all Code and other requirements.

Inspections Division
Date: 11/20/14

Electrical / Communication – 26 00 00

Entire electrical scope shall be priced as part of this work. General Contractor shall coordinate schedule of this work with other trades.

Install interior and exterior light fixtures as selected by owner and referenced in the following section (Lighting 26 50 00), coordinate quantity and locations with owner. All light fixtures to be supplied by owner and installed by electrical contractor.

Provide all feeders, meter boxes, isolated panel boards, branch circuit wiring, switches, receptacles, outlet boxes, plates, conduits, wire and accessories.

Provide and install devices and fixtures selected by owner. Coordinate quantity and locations with owner.

Provide direct-wired connections for all appliances.

Provide hook-ups and installation for the following and additional items as indicated on the drawings and by owner: Refer to following section for additional information.

A. Range
B. Refrigerator
C. Dishwasher
D. Vent Hood for range

Provide and install wiring, boxes, jacks and accessories for the following and additional items as indicated on the drawings and by owner:

A. Cable TV
B. Telephones
C. Structured cabling
D. Security system control panels by Owner.

Provide hard-wired smoke detectors and carbon monoxide detectors per code connected to alarm system.

Provide outlet boxes in plastic and seal as required to meet airtight drywall approach (see attached memo: AIR BARRIERS–AIRTIGHT DRYWALL APPROACH, BSC INFORMATION SHEET 401).

Provide doorbell and / or intercom at house entry door, coordinate with owner.

Provide dimmable toggle switches, duplex receptacles, switches and combination receptacle /USB charger device as indicated on drawings. All devices shall be Decora by Leviton, color white, or approved equal.

Provide Ground Fault Interrupter Circuits (GFI), as indicated on drawings and in all locations as required by code.

Note: It is not the intent of Drawings or Specifications to detail or indicate all wiring, conduit, connections or other accessories necessary for a complete installation. It is the Contractor's responsibility to provide all items necessary for a complete first class installation in compliance with all Code and other requirements.

General Contractor shall request a meeting with Electrical Contractor, Owner and Architect to review scope of technology and wiring and location of outlets and switches, prior to installation. Electrical Contractor shall mark locations of all wall outlets, light fixtures and switches for review by Owner and Architect prior to installation.

Lighting – 26 50 00

Note: Contractor to include allowance to cover cost of installation of all lighting fixtures throughout. Contractor shall coordinate location and quantity with floor plans, interior elevations, finish schedule and owner. Owner to choose, purchase and deliver all lighting fixtures during construction.

Electrical contractor to coordinate downlight housings required based on location (wet listed, touching insulation [IC], etc).

Provide all lamping as required for light fixtures to be fully operational. LED light fixtures are preferred. If bulbs are required for incandescent line voltage fixtures, then LED replacement bulbs should be used.

Coordinate extent of lighting required to be dimmable with owner prior to start of electrical work.

Earthwork – 31 00 00

The Contractor shall provide all site work, ledge removal, excavation, site drainage, back-filling, erosion control, etc. as required for a complete and finished project.

All trees and shrubs within the construction area shall be removed as required.

Provide erosion and sedimentation controls as required, including hay bales, stakes, and hay mulch, erosion control matting, filter fabric, and temporary seeding as required. All soil erosion and sedimentation control will be done in accordance with Maine Erosion and Sedimentation Control Handbook: Best Management Practices, MEDEP March 2003 and as revised.

Provide temporary fencing and/or barricades as required to protect the excavated areas during construction. Protect existing trees to remain from physical damage. Unsuitable material, such as clay, shall be removed from the site and replaced with clean, sandy gravel or other suitable material.

Provide perimeter foundation drains around entire perimeter of new foundation and under-slab drains under slab on grade, using 4" diam. perforated PVC pipe, ANSI/ASTM D 2729. Slope @ min. 1/4" per foot. Cover with 6” crushed stone and filter fabric, Mirafi 140N, or equal. Backfill with clean, sandy gravel as required. Test lines before back filling to insure free flow. Remove obstructions, replace damaged components, and retest system until satisfactory. All pipe connections shall be glued.

Ledge removal shall be done on a time and material basis. Include unit cost per cubic yard to remove ledge in proposal. Ledge removal determination to be made with the Owner and Architect before starting based on Contractor's estimate and opinion of probable quantities.

Provide trenching necessary for utility connection including but not limited to storm sewer, sanitary sewer, domestic water, and sprinkler service.

Exterior Improvements – 32 00 00

NOTE: Refer to Architectural Site Plan (A100) for location and final design for new driveway and landscaping. All work outside of the building envelope, not clearly defined in the Construction Documents shall be reviewed and coordinated with the Owner and Architect prior to start of construction.

Provide rough grading; finish grading, loam and seed or ground covers (as called for on the floor plans) for entire area of site disturbed by construction operations. Reuse stockpiled loam wherever possible, provided it complies with specifications.

Do not remove any topsoil from the site. Bring in additional loam as required to achieve minimum 6" sandy loam or loam soil as defined by the USDA Soil Conservation Service, Soil Classification System, with a pH value range of 6.0 to 6.5.

Inspections Division
Date: 11/20/14

Extent of lawn area: only as required to cover disturbed areas. Grass seed shall be a standard grade seed from the most recent year's crop, dry and free of mold. Mixture as follows (**coordinate seed mix and scope with owner**):

Pennlawn Creeping, Red Fescue	50%
Kentucky 31, Tall Fescue	30%
Common Perennial, Ryegrass	10%
Red Top	10%

Utilities – 33 00 00

NOTE: Connections should be made underground to town sewer, town water natural gas and electric.

PART B – SUPPLEMENTAL INSTALLATION TECHNIQUES / INSTRUCTIONS

- 100 SHERIDAN STREET HVAC RECOMMENDATIONS MEMO
- AIR BARRIERS–AIRTIGHT DRYWALL APPROACH, BSC INFORMATION SHEET 401

Inspections Division
Date: 11/20/14

APEX ENGINEERING
Achieving A Higher Standard
Design and Consulting Engineers

September 26, 2014

MEMORANDUM

From: Sonia Barrantes, APEX Engineering
To: Nancy Bogg and Mark Kiefner
Via: Harry Hepburn, Briburn Architecture

SUBJ: 100 SHERIDAN STREET HVAC RECOMMENDATIONS MEMO

1. APEX recommends that heat and domestic hot water be provided from a wall hung, condensing natural gas boiler coupled with a well-insulated indirect domestic hot water tank in the basement mechanical room.
    a. The heating system should be a primary-secondary configuration, de-coupled via a low-loss header to prevent the boiler cycling associated with a low-energy house.
    b. Ensure the boiler control is equipped with a domestic hot water priority option. Boiler set-point temperature should increase to the rated temperature for the indirect hot water coil during a domestic hot water call.
    c. Make use of low temperature heating and modulate heating water temperature based on outside air reset. Recommend 160°F maximum heating water temperature at 0°F outside air temperature and below, up to 120°F heating water temperature at 60°F outside air temperature. Adjust reset schedule to higher heating water temperatures based on occupant comfort, as necessary.
    d. Recommend using a domestic water recirculation pump to ensure hot water is readily available, due to the relatively long distance between the basement domestic hot water tank and the third story fixtures.
        i. Control the cycling of the recirculation pump with a return line aquastat set to 110°F with a 5°F deadband (adjustable).
    e. Recommend using a coaxial combustion air and exhaust gas vent duct for the boiler so only a single exterior penetration will be required. The boiler can be mounted on an interior wall, however it will need to be ducted through to an exterior penetration. Exhaust duct must terminate above snow level (minimum 2 feet).
    f. *Recommended basis of design equipment:* Viessmann Vitodens 200 WB2HA-19 natural gas condensing boiler, a Viessman 120/80 low-loss header, and a 42 gallon Viessmann Vitocell-100V indirect domestic hot water tank.

2. The estimated maximum house heat load was 24,000 BTUH, per the Horizon energy model. APEX recommends installing hydronic baseboard (or other hydronic terminal units) around the perimeter of the house in accordance with room loads.
    a. Size the terminal hydronic units (fin tube, radiant panels, etc.) based on rated output per linear foot or per terminal unit. The house averaged approximately 10 BTUH/ft^2. Install

sufficient terminal units on each floor, including basement level entry to satisfy the estimated maximum heat load for each space.

i. For example, at 300 BTUH/lineal foot of fin tube radiation at 160°F supply temperature, the house would require approximately 80 total linear feet of baseboard fin tube.
ii. This could come out to approximately 35 total lineal feet of active baseboard element (not including end pieces, etc. without heating elements) on each upper floor, and 10 feet on the lower entry floor.

3. APEX recommends providing ventilation air via an energy-recovery ventilator (ERV), or a heat-recovery ventilator (HRV).
   a. Per the International Residential Code 2009:
      i. Minimum required kitchen exhaust: 100 CFM intermittent/25 CFM continuous.
      ii. Minimum required bathroom exhaust: 50 CFM intermittent/20 CFM continuous.
   b. Recommended E/HRV options/features:
      1. Enthalpy core (humidity control – this means an ERV instead of an HRV)
      2. Electric pre-heater for extreme temperature protection
      3. Summer bypass option (flush house with cooler outside air by bypassing the heat exchanger core)
      4. Wireless remote control
      5. Negative pressure protection
      ii. Recommended Supply Locations (125 CFM Total)
         1. Master Bedroom – 25 CFM
         2. Guest Bedroom – 20 CFM
         3. Den – 20 CFM
         4. Living/Dining Room – 40 CFM
         5. Study – 20 CFM
      iii. Recommended Exhaust Locations (125 CFM Total)
         1. Kitchen – 40 CFM
         2. Powder Room – 20 CFM
         3. Top of Stairwell (to ameliorate stack effect and stratification) – 25 CFM
         4. Master Bath – 20 CFM
         5. Guest Bath – 20 CFM
   c. Installation considerations:
      i. APEX recommends locating the unit in a second floor or third floor space to make installation, exterior duct penetrations, and interior duct routing easier.
      ii. The intake and exhaust duct will need to transition to and penetrate an exterior wall, and be separated from each other and other exhaust outlets in accordance with manufacturer's instructions (for Zehnder, this is 10 feet) and per code.
      iii. The intake duct inlet and exhaust duct outlet will need to be above the ground snow level, which in Portland is approximately 2 feet, however, if the inlet and outlet are located in an area where snow may drift, this would need to be higher.
      iv. The unit will need space to transition the air tubes from the unit into the floor/wall/chase, and the tubes will need to be able to transit to all the supply and return locations. Plan to leave the installer 3 times the diameter of the tube (the

Comfotube is 3" O.D.) to make a 90-degree turn, and 6 times the diameter for a 180-degree turn.

v. If a gas cooktop is going to be used, APEX recommends using a direct-vent to the outside. If the exhaust flow of the range hood exceeds 150 CFM, APEX recommends installing a make-up air system.

vi. If an electric cooktop is going to be used, APEX recommends using a recirculating range hood with an activated carbon filter combined with the continuous exhaust of the ventilation system.

d. *Recommended basis of design equipment:* Zehnder Comfoair 200.

4. APEX recommends providing an air-conditioning provision via mini-split heat pumps or mini-split cooling only units (depending on the options offered by different manufacturers).
   a. Work with mechanical contractor for options. The total cooling load on design day was 19,000 BTUH, per the Horizon Energy model. It is the Owner's option to go with a model slightly smaller than the estimated cooling load (18,000 BTUH/1.5 Ton model, recommended), or size up to a 24,000 BTUH/2.0 Ton model.
      i. Owner's option to go with a single cooling zone for the whole house, or one zone per floor.
      ii. Option to connect multiple indoor units in a single-zone will vary by manufacturer.
   b. APEX recommends a single 9,000 – 12,000 BTUH flush-mounted ceiling cassette in the bedroom level central hallway.
   c. APEX recommends a single 9,000 – 12,000 BTUH wall-mounted cassette on a centrally-located wall on the living level.
   d. APEX recommends selecting a system, and then installing the refrigerant lines and electrical infrastructure during construction. Decide during or after the first summer if the house will require active cooling, based on Owner's preferences.
   e. If the house has separate heating and cooling systems, per code, the systems must be interlocked to prevent simultaneous heating and cooling.
   f. *Recommended basis of design equipment:* Mitsubishi
      1. Indoor Units:
         a. Recessed, ceiling-mounted: SLZ-KA09NA
         b. Wall-mounted: MSZ-GE09NA
      2. Outdoor Unit: MXZ-2B20NA

5. Opinion of Probable Equipment Costs (Does not include installation):
   a. Natural Gas Condensing Boiler, Indirect Hot Water Heater, Low Loss Header: $7,000
   (Source: Similar Project, RS Means Mechanical Cost Data 2013 – 23 52 16.24-0140)
   b. Zehnder Comfoair 200 System: $6,500
   (Source: Similar Project)
   c. Mitsubishi 1.5 Ton Heat Pump with 2 indoor units (2 Zones): $3,800
   (Source: Similar Project, RS Means Mechanical Cost Data 2013 – 23 81 43.10-1510)

BSC Information Sheet 401

Air Barriers–Airtight Drywall Approach

for All Climates

Inspections Division
Date: 11/20/14

Sealing Perimeter of Drywall Assemblies

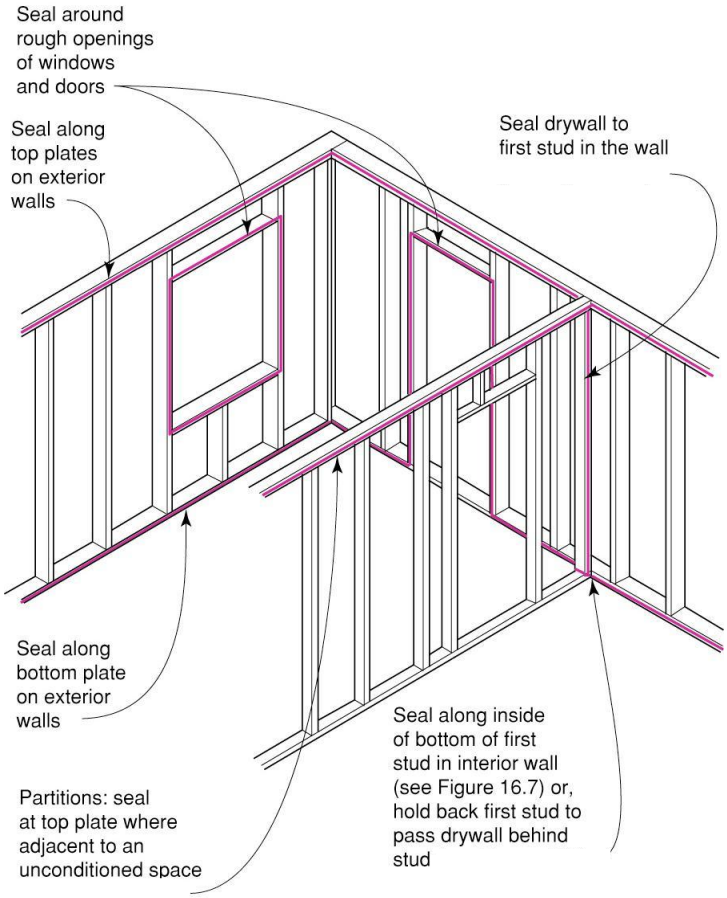

Air Barriers—Airtight Drywall Approach

Gypsum board drywall is, itself, a suitable air barrier material. The taping of drywall seams results in a plane of airtightness at the field of the wall. However, several steps must be taken to use this material property to create a continuous and complete air barrier system. To do this, it is important to create air barrier continuity at the perimeter of drywall assemblies, at all penetrations through the drywall, and, finally, in areas of the enclosure without interior drywall.

Drywall Assembly Perimeter

Air barrier continuity at the perimeter of drywall assemblies is achieved by sealing the edges of the drywall to solid framing materials. This requires a continuous bead of sealant along:

- all exterior wall bottom and top plates,
- all top plates at insulated ceilings,
- rough opening perimeters, and
- both sides of the first interior stud of partition walls.

The air seal at the partition wall intersection is shown in greater detail below.

This Information Sheet has been prepared by Building Science Corporation for the Department of Energy's Building America Program, a private/public partnership that develops energy solutions for new and existing homes. The views and opinions of authors expressed herein do not necessarily state or reflect those of the United States government or any agency thereof.

For more information about Building America go to **www.buildingamerica.gov**

Building America U.S. Department of Energy Research Toward Zero Energy Homes

Inspections Division
Date: 11/20/14

Airtight Drywall Approach – Interior Air Barrier Using Drywall and Framing

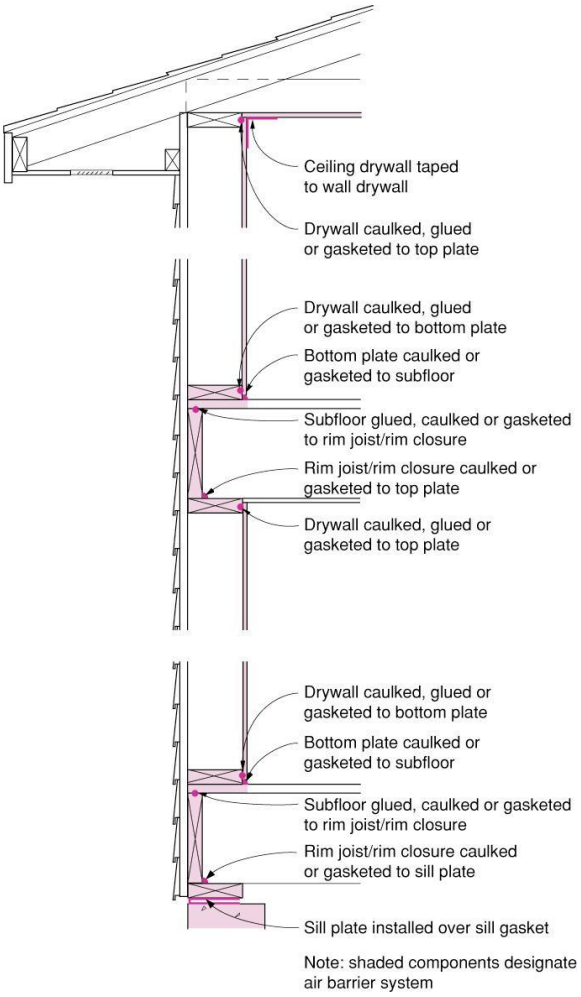

Penetrations of Drywall Assemblies

Typical penetrations in exterior wall and ceiling drywall assemblies include electric penetrations – electric boxes and recessed fixtures. Electric boxes can be made air tight by caulking or sealing all openings in the box (including around wire penetrations) and by sealing the face of the box to the drywall. Specially designed airtight electric boxes with flexible boot seals at wire penetrations and a gasketed flange at the face can also provide air barrier continuity.

Electric Box Penetrations

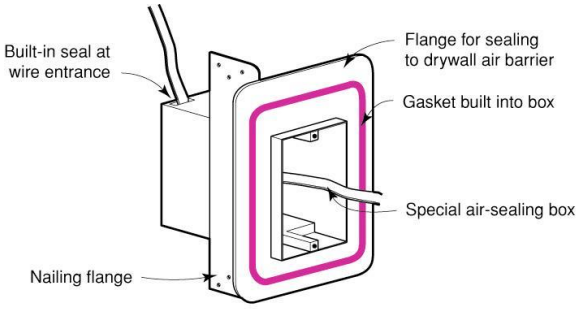

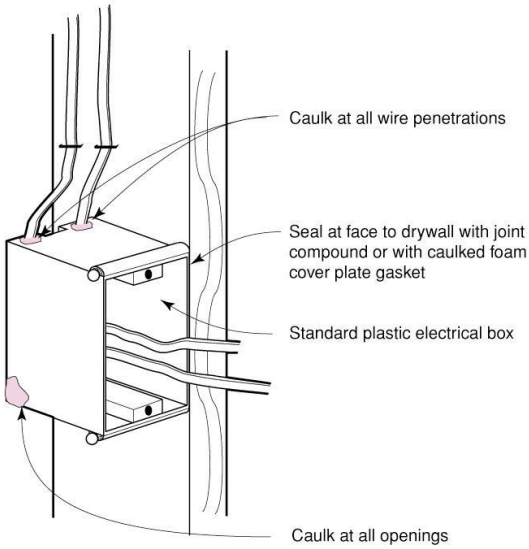

© buildingscience.com

Inspections Division
Date: 11/20/14

Air Sealing at Partition

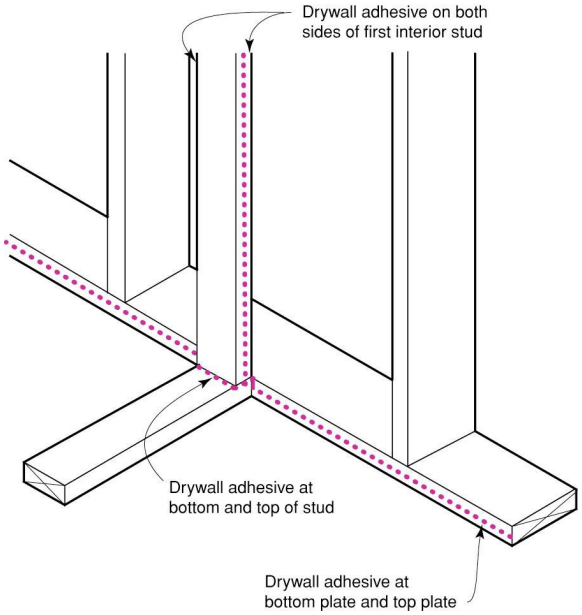

- Adhesive at bottom and top of partition stud allows air barrier to transition uninterrupted to other side of partition
- Penetrations through first partition stud must also be sealed

Top Plate with Unconditioned Space Above

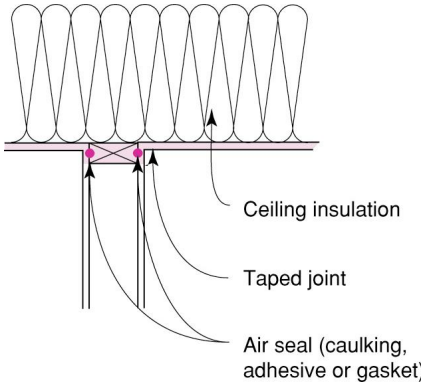

- Penetrations through top plate must also be sealed

Recessed ceiling fixtures in insulated ceiling should be both insulation contact ("IC")- and air tight rated. The housing of the recessed fixture should also be sealed (with caulk or an effective gasket) to the ceiling gypsum board.

Structural Framing Air Barrier Transitions
Obviously, drywall cannot provide an air barrier where it is absent. The diagrams below and to the right show how the air barrier continuity is maintained through the framing at rim joist/band joist areas. These measures form a necessary complement to drywall sealing in the airtight drywall approach. Refer to other Information Sheets for air sealing details at other common conditions. The resources listed below also illustrate air sealing details and provide further discussion.

Intersection of Floor Joists and Exterior Wall

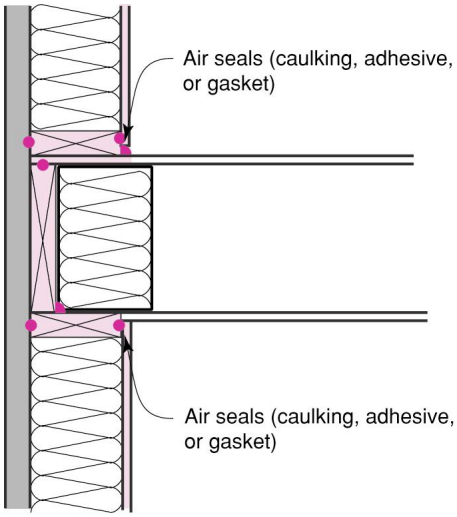

- Drywall sealed to top and bottom plates
- Bottom plate sealed to subfloor
- Subfloor sealed to rim closure board
- Rim closure board sealed to top plate

© buildingscience.com

Inspections Division
Date: 11/20/14

Recessed Fixture in Insulated Ceiling

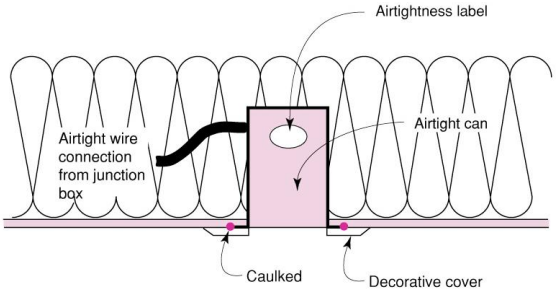

- Fixture labeled IC-rated and airtight as determined by ASTM E-283 air leakage test
- Housing (not decorative trim piece) sealed to ceiling with caulk or gasket

Air Barrier Continuity at Rim Joist/Band Joist

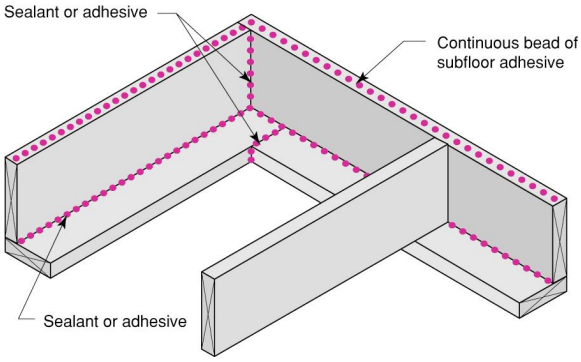

- Continuous fillet bead applied at bottom of rim closure board
- Continuous bead of adhesive applied to top of rim closure board
- Sealant applied at all butt joints in rim closure board and sill plate/top plate
- Spray foam may also be used to seal between the sill/top plate, rim/band joist, and floor deck. Note that joints in the sill/top plate may not be sealed by the foam application.

Suggestions for Further Research:

"Understanding Air Barriers", Building Science Digest-104, www.buildingscience.com.

"READ THIS: Before You Design, Build, or Renovate," Building Science Primer-040, www.buildingscience.com.

Lstiburek, Joseph W.; *Builder's Guide Series*, Building Science Press, 2006.

© buildingscience.com