BECKER
STRUCTURAL ENGINEERS
75 York Street, Portland, Maine 04101
207.879.1838 ■ beckerstructural.com

STATE OF MAINE
NATHAN R. MERRILL
No. 12279
LICENSED
PROFESSIONAL ENGINEER

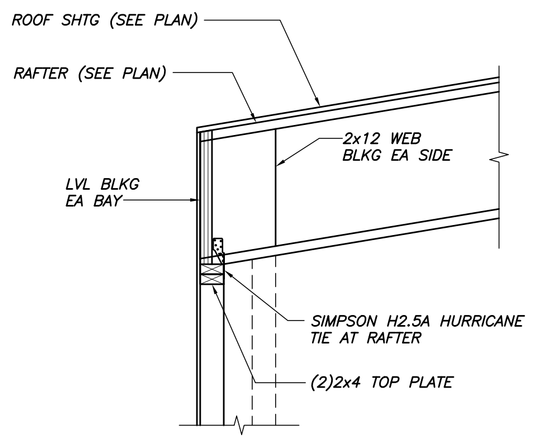

SECTION 1 / S101
3/4"=1'-0"

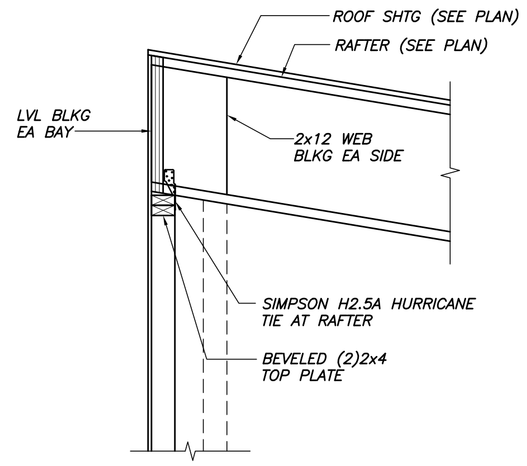

SECTION 2 / S101
3/4"=1'-0"

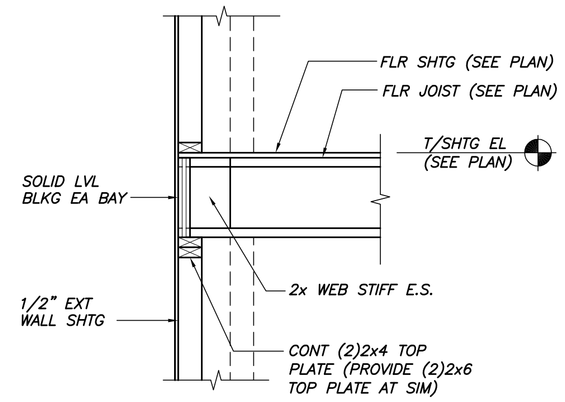

SECTION 3 / S101
3/4"=1'-0"

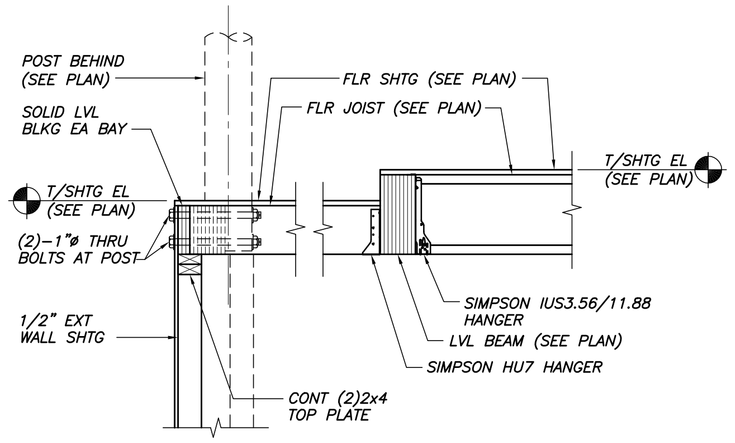

SECTION 4 / S101
3/4"=1'-0"

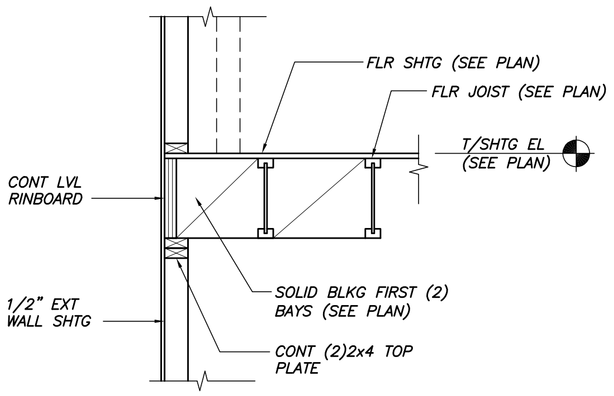

SECTION 5 / S101
3/4"=1'-0"

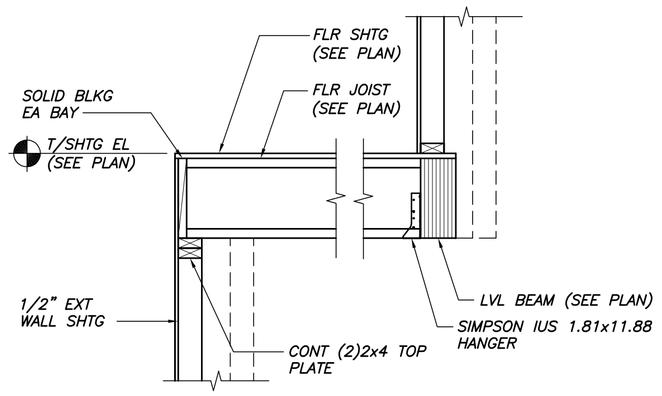

SECTION 6 / S101
3/4"=1'-0"

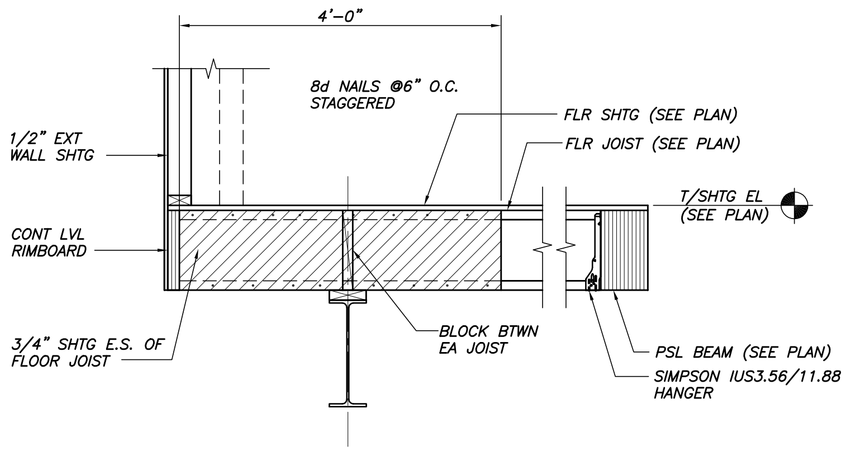

SECTION 7 / S101
3/4"=1'-0"

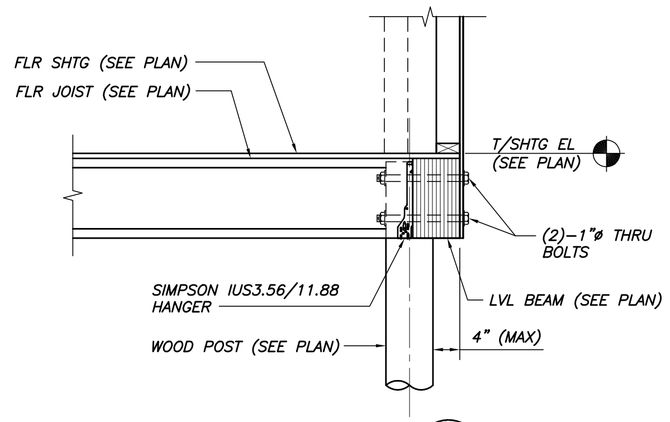

SECTION 8 / S101
3/4"=1'-0"

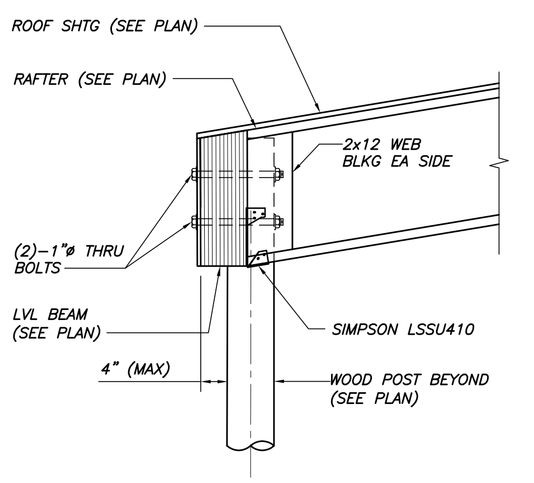

SECTION 9 / S101
3/4"=1'-0"

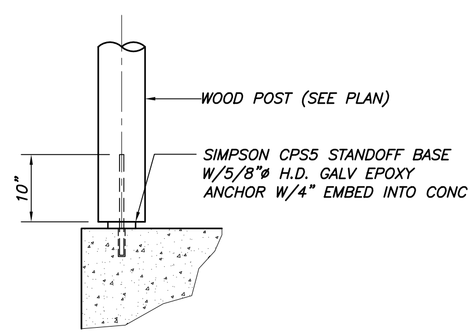

TYP EXPOSED POST BASE DETAIL
N.T.S.

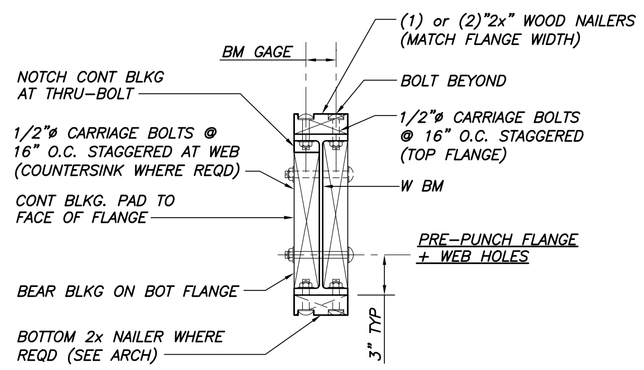

TYP WOOD NAILER/WEB BLKG TO W-BM DETAIL
N.T.S.

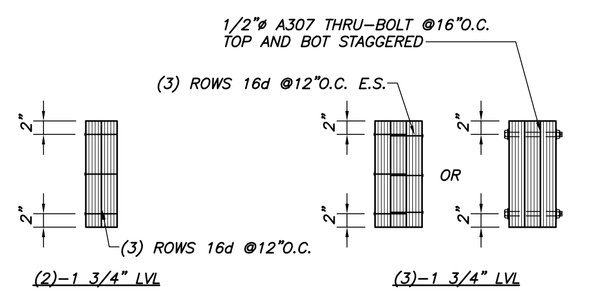

(SOLID LVL MEMBERS WITH EQUIVALENT MULTI PLY WIDTHS MAY BE USED)

TYP "BUILT-UP" LVL DETAIL, U.N.O.
N.T.S.

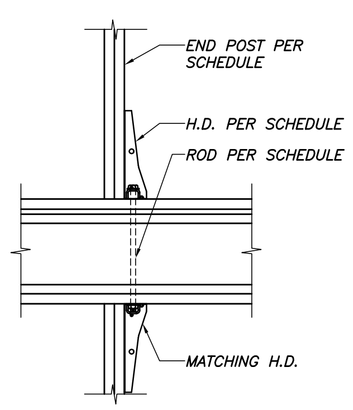

TYP HOLDOWN DETAIL @ FLOOR
N.T.S.

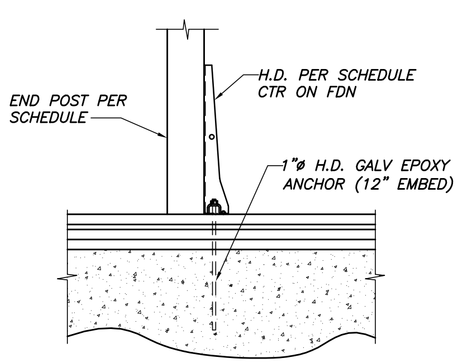

TYP HOLDOWN DETAIL @ FOUNDATION
N.T.S.

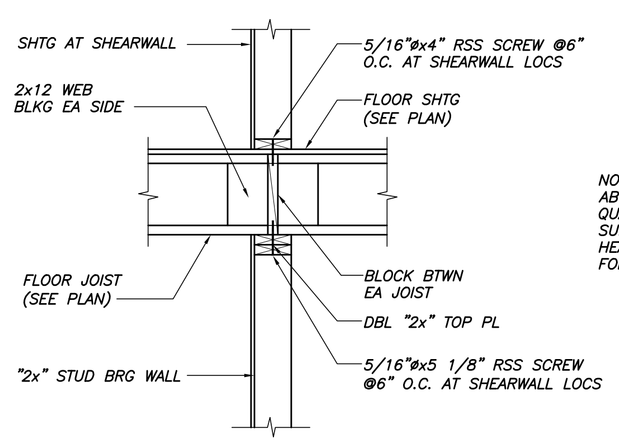

TYP BEARING WALL DETAIL U.N.O.
N.T.S.

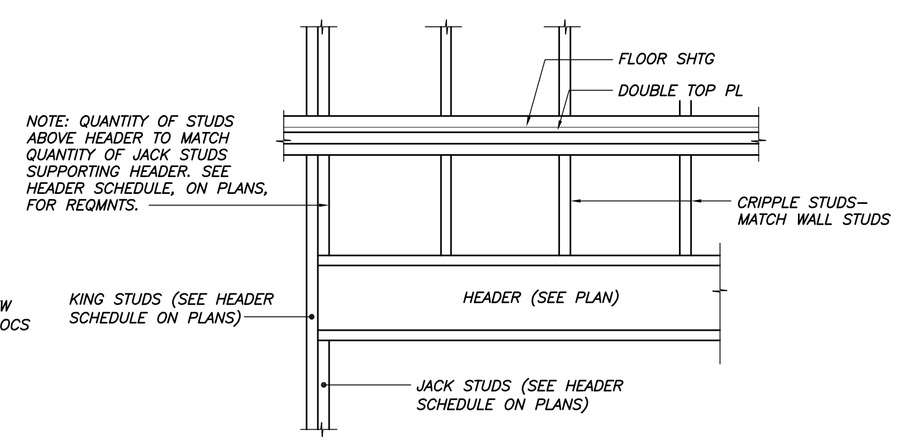

TYP HEADER DETAIL
N.T.S.

BOGG + KIEFNER RESIDENCE

100 Sheridan Street Portland, ME

Project Description

BR BURN
architecture for life
29 Maple St. | Suite 202 | Portland, ME 04101 | 207-774-4462

CONSULTANTS:

REVISIONS:

ISSUED:	09/29/2014
PROJECT No:	3401
DRAWN BY:	MSK
CHECKED BY:	NRM

SHEET TITLE: FRAMING SECTIONS & DETAILS

S301