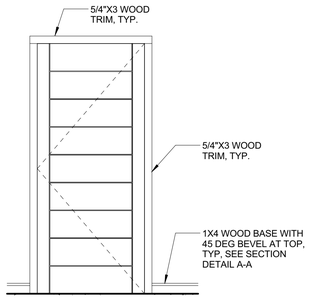

8 TYPICAL TRIM DETAILS
1/2" = 1'-0"

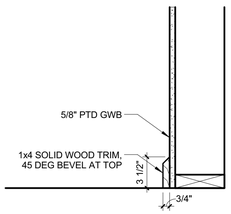

7 TYPICAL BASE DETAIL A-A
1 1/2" = 1'-0"

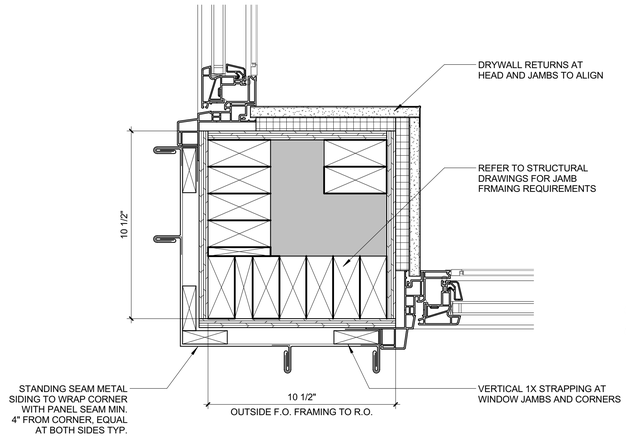

4 PLAN DETAIL AT CORNER WINDOW
3" = 1'-0"

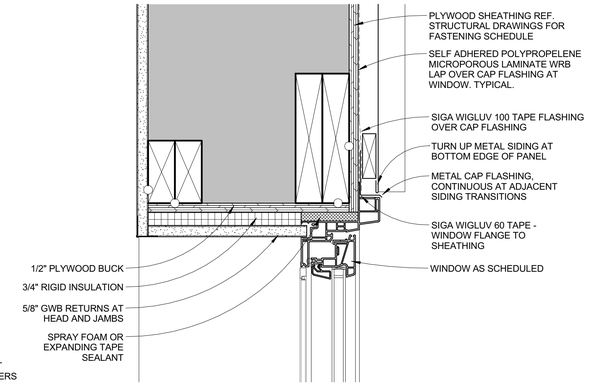

STANDING SEAM METAL SIDING

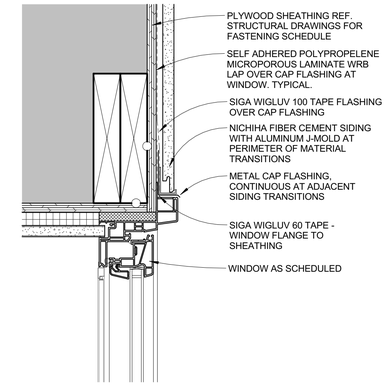

NICHIHA FIBER CEMENT SIDING

3 TYPICAL WINDOW HEAD
3" = 1'-0"

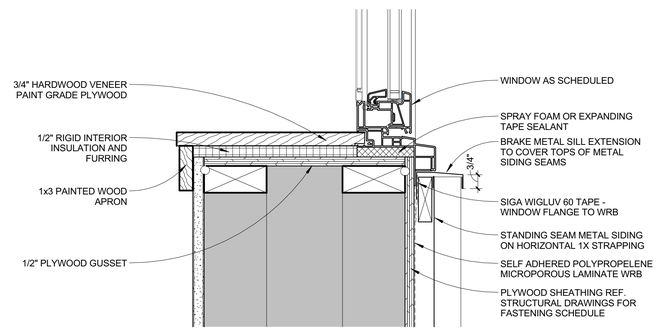

STANDING SEAM METAL SIDING

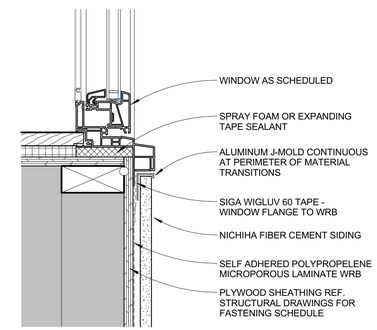

NICHIHA FIBER CEMENT SIDING

2 TYPICAL WINDOW SILL
3" = 1'-0"

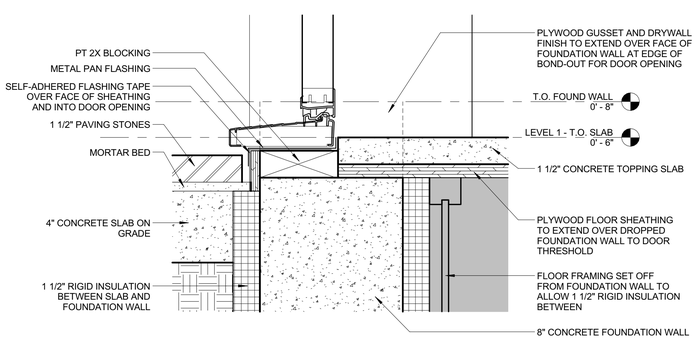

5 ENTRY DOOR 101A THRESHOLD
3" = 1'-0"

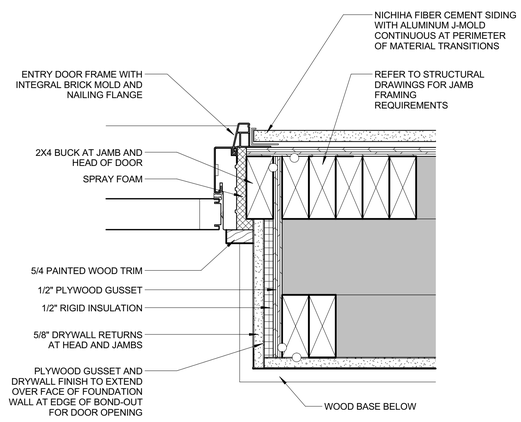

6 ENTRY DOOR 101A JAMB
3" = 1'-0"

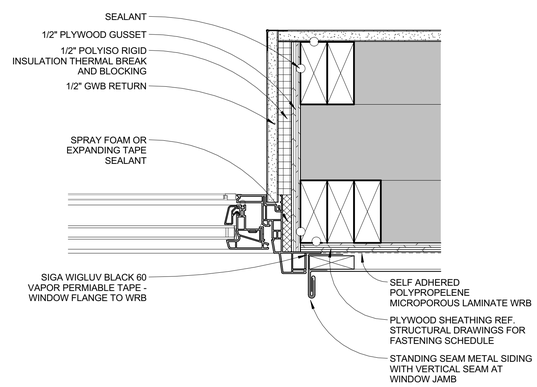

STANDING SEAM METAL SIDING

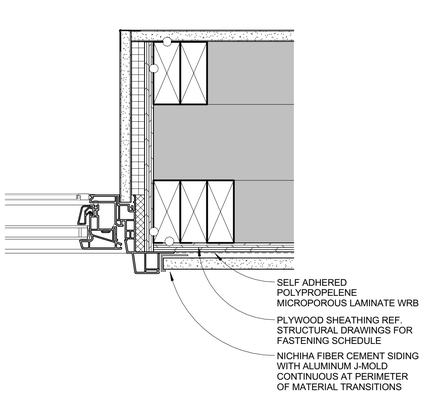

NICHIHA FIBER CEMENT SIDING

1 TYPICAL WINDOW JAMB
3" = 1'-0"

Inspection Division
Date: 11/20/14

LICENSED ARCHITECT
HARRY W. HEPBURN IV
No. 3338
STATE OF MAINE

BOGG + KIEFNER RESIDENCE
100 SHERIDAN STREET, PORTLAND, MAINE

BR BURN
architecture for life
76 Middle St., Suite 202 | Portland, ME 04101 | 207-774-4662

CONSULTANTS:

REVISIONS:

ISSUED:	09/30/14
PROJECT No:	1410
DRAWN BY:	RIP
CHECKED BY:	HWH
SHEET TITLE:	WINDOW & DOOR DETAILS

A401