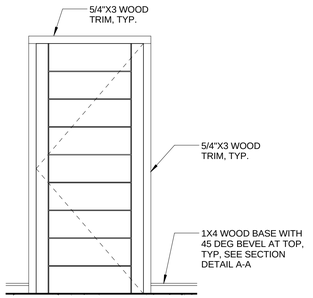

8 TYPICAL TRIM DETAILS
1/2" = 1'-0"

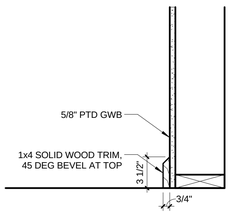

7 TYPICAL BASE DETAIL A-A
1 1/2" = 1'-0"

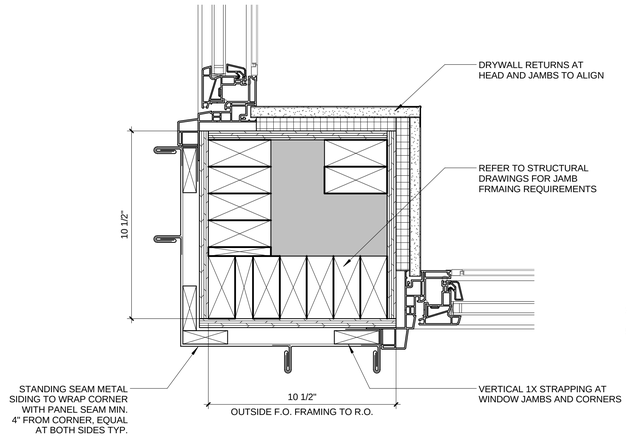

4 PLAN DETAIL AT CORNER WINDOW
3" = 1'-0"

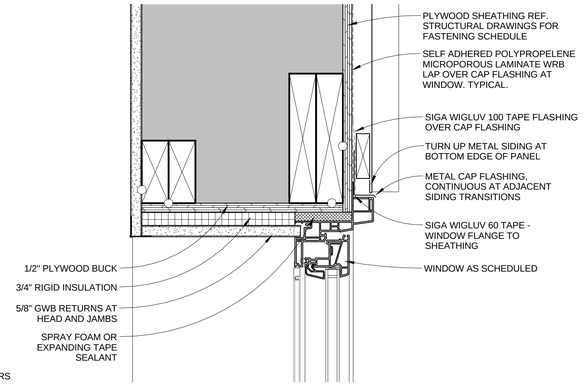

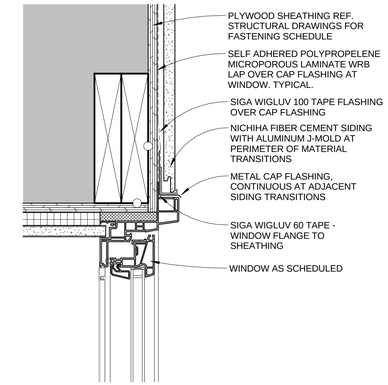

3 TYPICAL WINDOW HEAD
3" = 1'-0"

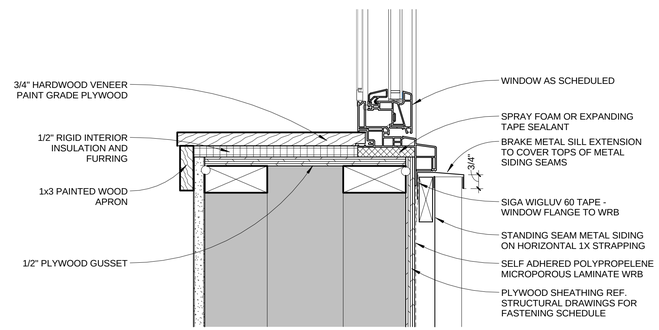

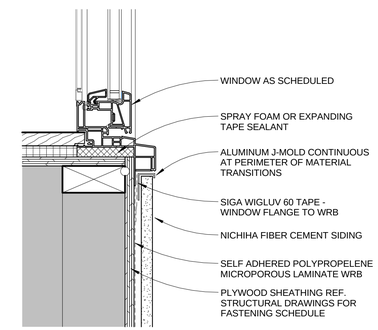

2 TYPICAL WINDOW SILL
3" = 1'-0"

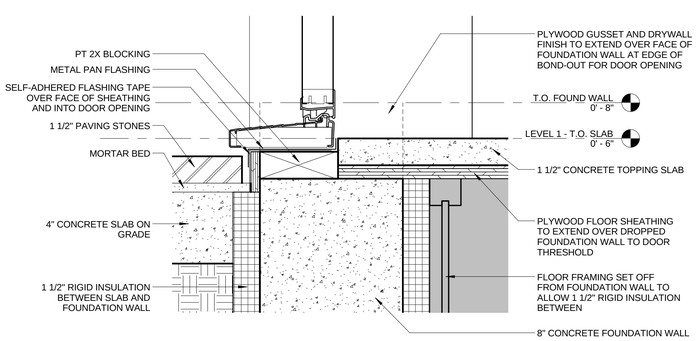

5 ENTRY DOOR 101A THRESHOLD
3" = 1'-0"

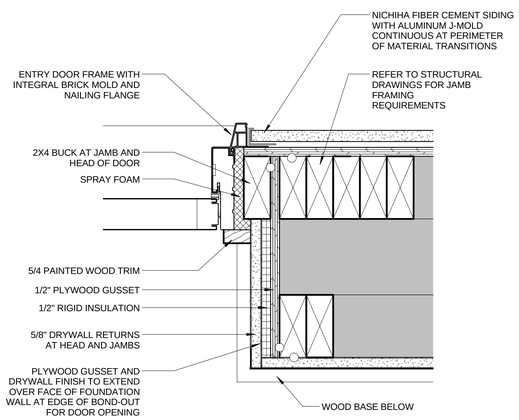

6 ENTRY DOOR 101A JAMB
3" = 1'-0"

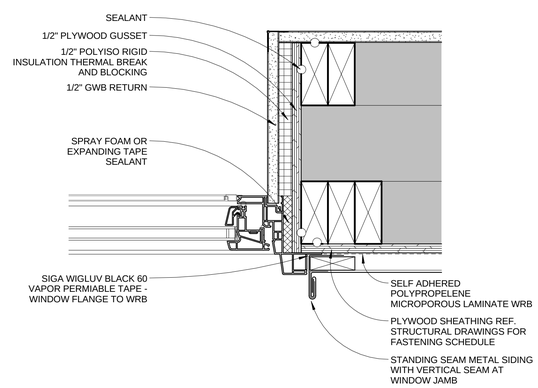

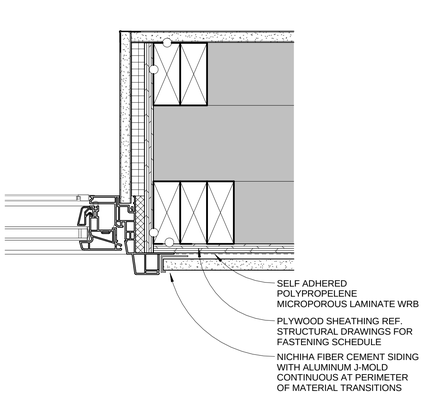

1 TYPICAL WINDOW JAMB
3" = 1'-0"

LICENSED ARCHITECT
HARRY W. HEPBURN IV
No. 3338
STATE OF MAINE

BOGG + KIEFNER RESIDENCE

100 SHERIDAN STREET, PORTLAND, MAINE

BR BURN architecture for life
28 Maple St | Suite 202 | Portland, ME 04101 | 207-774-6452

CONSULTANTS:

REVISIONS:

ISSUED:	09/30/14
PROJECT No:	1410
DRAWN BY:	RIP
CHECKED BY:	HWH

SHEET TITLE:
WINDOW & DOOR DETAILS

A401