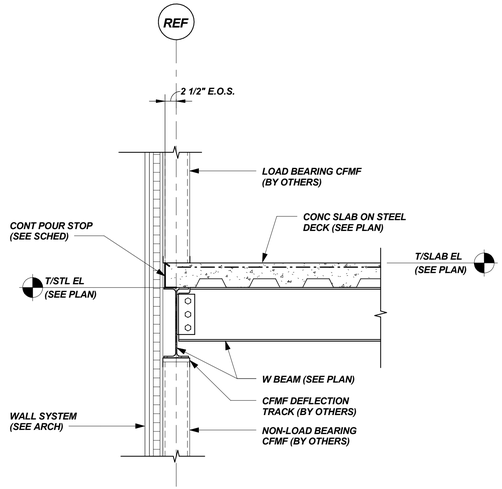

SECTION 1 / S1.3
3/4" = 1'-0"

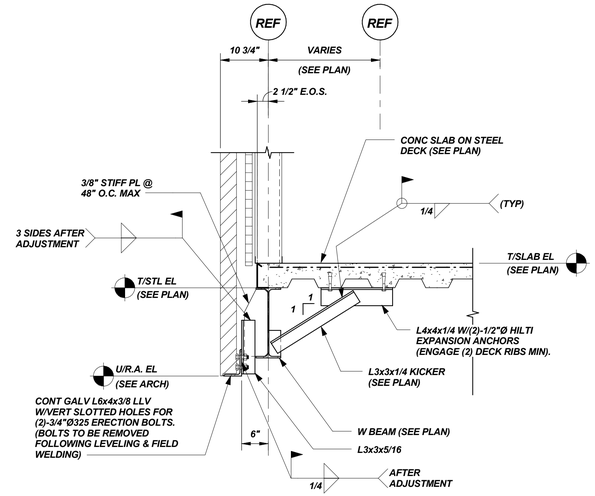

SECTION 2 / S1.3
3/4" = 1'-0"

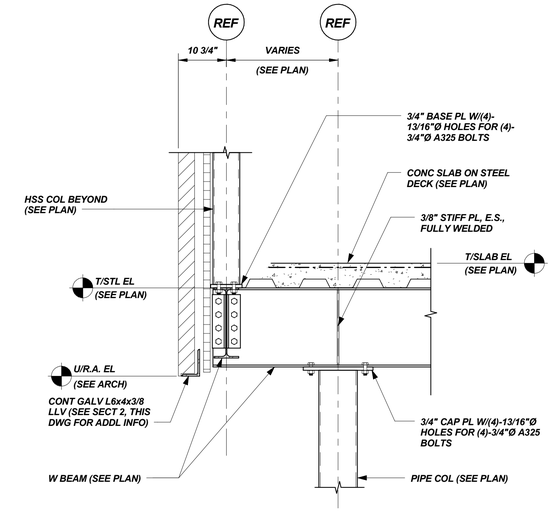

SECTION 3 / S1.3
3/4" = 1'-0"

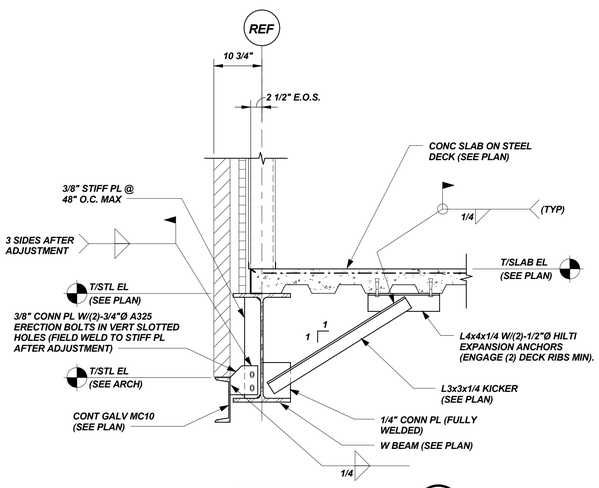

SECTION 4 / S1.3
3/4" = 1'-0"

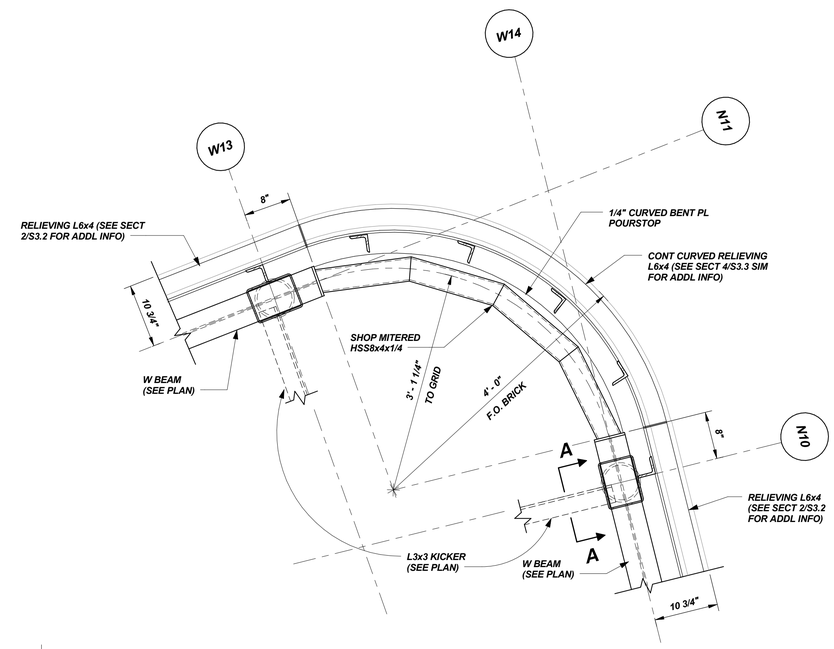

DETAIL A / S1.3
1" = 1'-0"

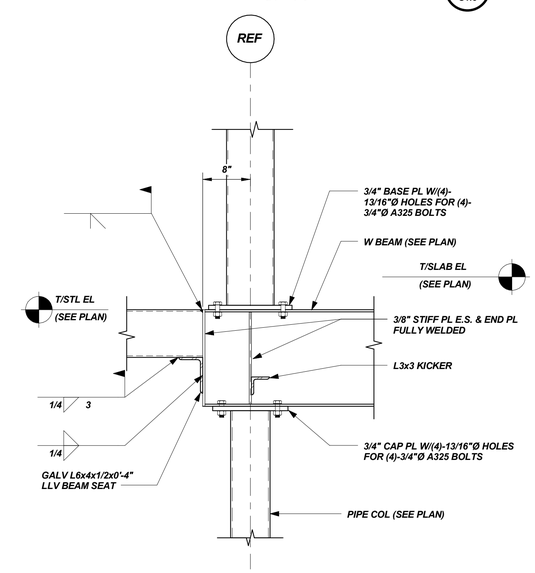

SECT A-A

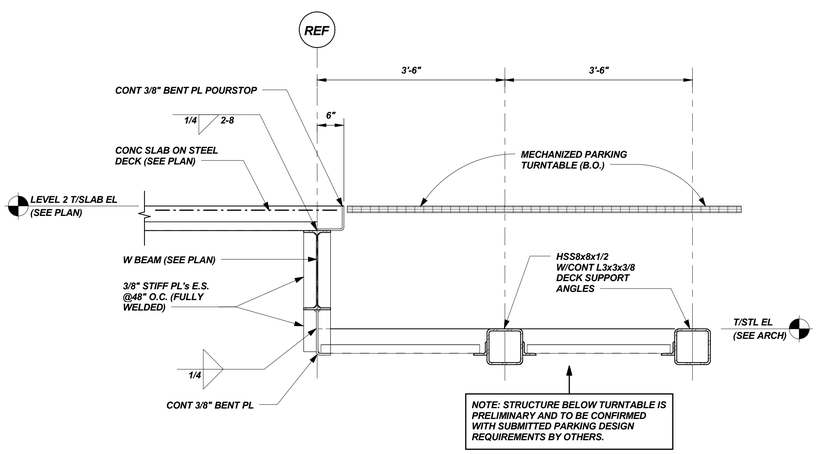

SECTION 5 / S1.2
3/4" = 1'-0"

CALEB JOHNSON ARCHITECTS + BUILDERS
265 MAIN STREET, SUITE 201 BIDDEFORD, ME 04005
T: 207.283.8777 F: 207.283.8778 CJAB.ME

BECKER STRUCTURAL ENGINEERS
75 York Street, Portland, Maine 04101
207.879.1838 ▪ beckerstructural.com

STATE OF MAINE
DANIEL S. BURNE
No. 10910
LICENSED
PROFESSIONAL ENGINEER

PERMIT SET

DRAFTSPERSON: KE
DATE OF ISSUE: 07/21/17
PROJECT STATUS: PERMIT SET

221 Congress Street

Hay Runner, LLC
221 Congress Street Portland ME 04101

FRAMING SECTIONS & DETAILS

S3.2