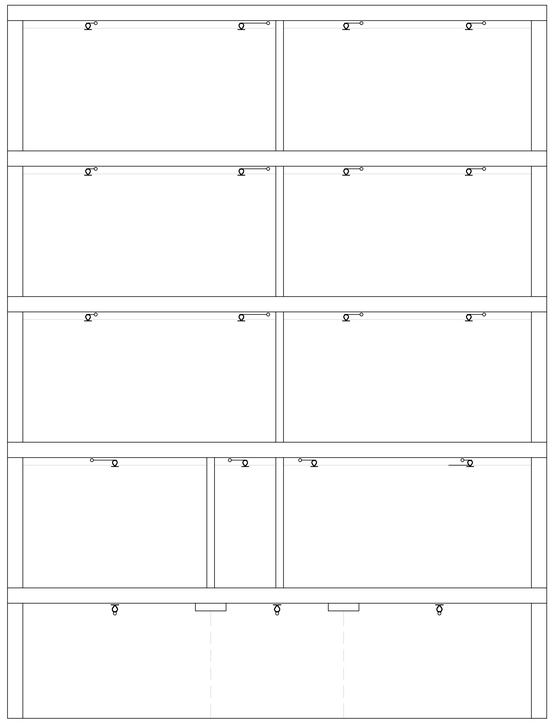

SECTION VIEW
SCALE: 1/4"=1'-0"

SITE PLAN
SCALE: 1"=30'

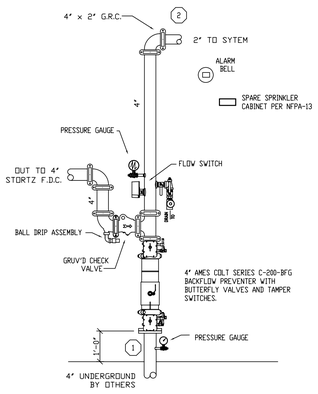

RISER DETAIL
SCALE: N.T.S.

FIRE SPRINKLER GENERAL NOTES

OCCUPANCY: APARTMENT BUILDING WITH SMALL BUSINESSES.
DESIGN STANDARD:NFPA–13 2010 LIGHT HAZARD & NFPA-13R 2010.
DESIGN DENSITY: ROOM DESIGN
SPRINKLERS UPRIGHT: TYCO (AS NOTED ON PLAN)
SPRINKLERS PENDENT: TYCO (AS NOTED ON PLAN)
ESCUTCHEONS: WHITE 2 PIECE SEMI–REC.
PIPING 1"–1½": SCH. 40 BLACK STEEL WITH THREADED ENDS AND BLAZEMASTER PLASTIC CPVC DESIGNED AND APPROVED TO BE USED WITH THIS STANDARD.
PIPING 2"-6": SCH. 10 BLACK WITH GROOVED ENDS & BLAZEMASTER PLASTIC CPVC DESIGNED AND APPROVED TO BE USED WITH THIS STANDARD.
HANGERS TO BE U.L. & FM APPROVED.
AND SPACED PER NFPA–13
ALL PIPING TO BE TESTED AT 200 PSI FOR 2 HOURS.
PROVIDE TAMPER SWITCH ON ALL CONTROL VALVES.
PROVIDE HYDRAULIC NAME PLATE PER NFPA-13.
COORDINATE FIRE SPRINKLER PIPING WITH OTHER TRADES.
⟨0⟩ DENOTES HYDRAULIC REFERENCE POINTS.
–⊕– DENOTES GROOVED COUPLING IN PIPE.
RN = RISER NIPPLE.
SG = SPRIG.
DN = DROP NIPPLE.
GC = GROOVED COUPLING.
TOE = THREAD ONE END.
GBE = GROOVE BOTH ENDS.

PROTECTION OF THE SPRINKLER SYSTEM AGAINST FREEZING IS THE RESPONSIBILITY OF THE OWNER.

REVISIONS	NOTES

HEAD COUNT									
SPRINKLER TYPE	IDENTIFICATION NO.	MFG.	ESC.	MODEL	FINISH	ORIFICE	TEMP.	SYMBOL	QUANT.
TOTAL SPRINKLERS THIS DRAWING									

STANDARD SYMBOLS	STANDARD SYMBOLS
– POST INDICATOR VALVE	– ALARM CHECK VALVE
– KEY VALVE	– RISER W/ALARM VALVE
– FIRE HYDRANT	– RISER W/DRY VALVE
– FIRE DEPT. CONNECTION	– RISER W/ELEC. FLOW SWITCH
– O.S. & Y GATE VALVE	– RISER W/DELUGE VALVE
– SWING CHECK VALVE	– WATER MOTOR BELL
– NEW UNDERGROUND	– ELECTRIC BELL
– EXIST UNDERGROUND	– FLUSH FIRE DEPT. CONNECTION

INSPECTIONS	
1.	
2.	
3.	
4.	
5.	
RESPONSIBLE MANAGING SUPERVISOR #348	
CONTRACTOR LICENSE #295	

229 CONGRESS STREET
PORTLAND, MAINE 04101

FIRE PROTECTION PLAN

FREEDOM FIRE PROTECTION, INC.
209 QUAKER RIDGE ROAD
CASCO, MAINE 04015

JOB No.	M0153
DATE	12/27/13
DRAWN BY	MJN
SCALE	AS NOTED
SHEET No.	FP–1of3