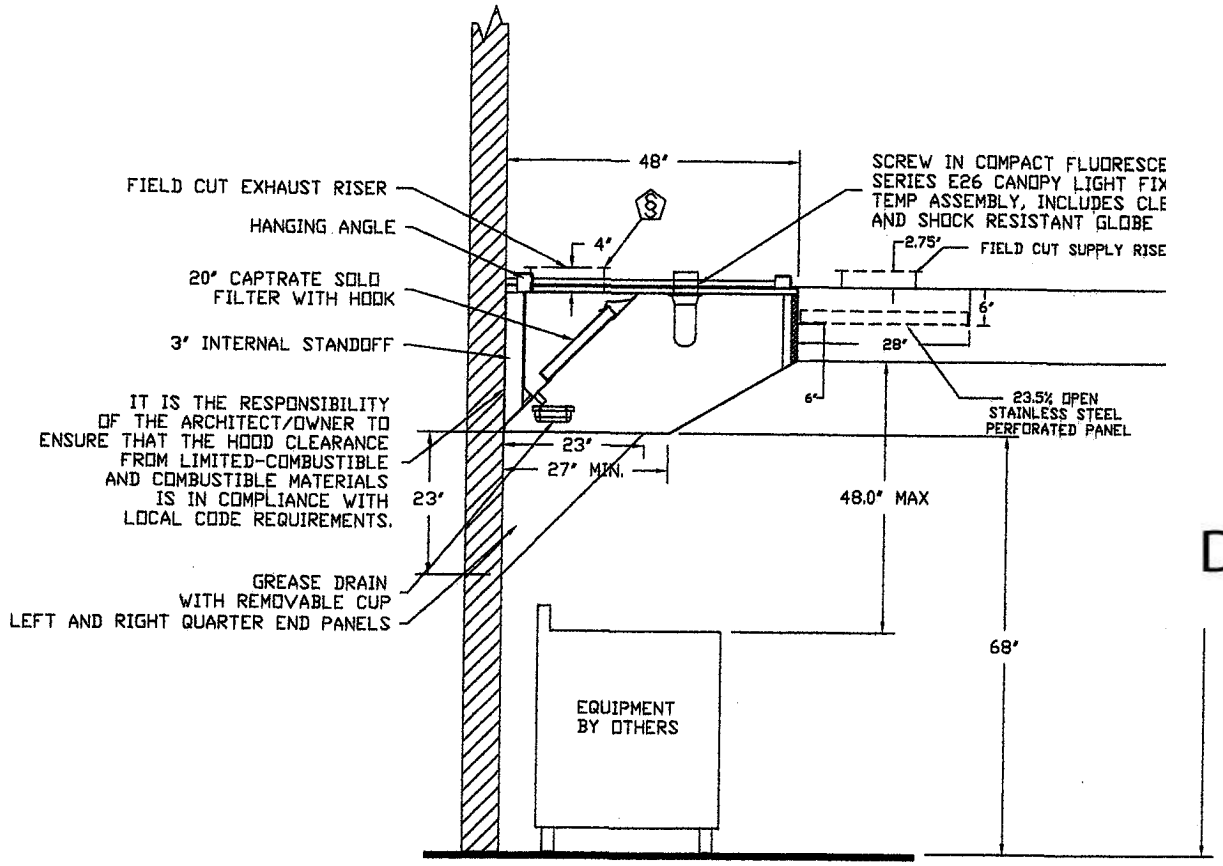

SECTION VIEW – MODEL 4812ESX-2
HOOD – #1

Reviewed for Code Compliance
Inspections Division
Approved with Conditions

Date: 12/08/16

CUSTOMER APPROVAL TO MANUFACTURE	
Approved as Noted	☐
Approved with NO Exception Taken	☐
Revise and Resubmit	☐
SIGNATURE	
Your Title	Date

ECON-AIR

JOB Izakaya Minato r.1	
LOCATION Biddeford, ME	
DATE 10/11/2 1	JOB # 2801168
DWG #	DRAWN BY KCD-21

PLAN VIEW – Hood #1
10' 0.00" LONG 4812ESX–

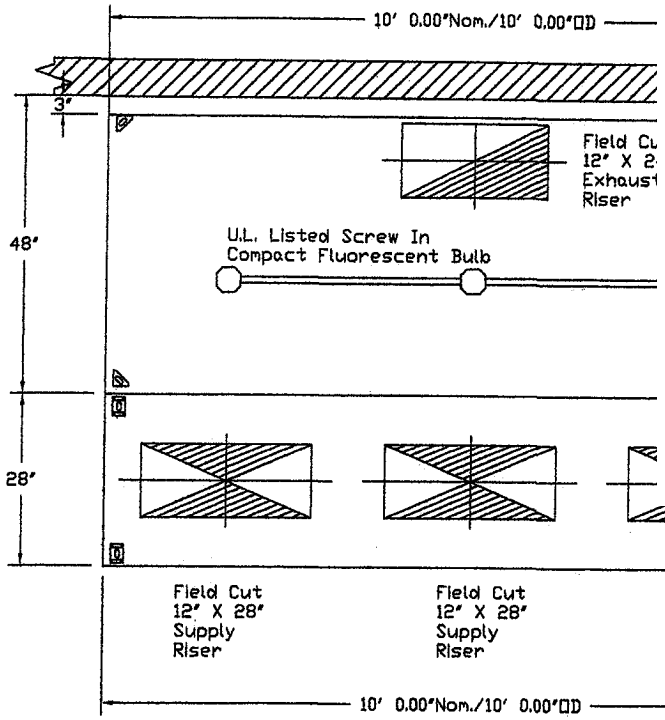

PLAN VIEW – Hood #2 (28"W Supply Plenum)
10' 0.00" LONG 286MISC–PSP

CITY OF PORTLAND, MAINE
RESURGAM

Reviewed for Code Compliance
Inspections Division
Approved with Conditions

Date: 12/08/16

CUSTOMER APPROVAL TO MANUFACTURE	
Approved as Noted	☐
Approved with NO Exception Taken	☐
Revise and Resubmit	☐
SIGNATURE	
Your Title	Date

ECON-AIR

JOB Izakayo Minato r.1	
LOCATION Biddeford, ME,	
DATE 10/11/2016	JOB # 2801168
DWG # 2	DRAWN BY KCD-21

HOOD INFORMATION – Job#2801168

HOOD NO.	TAG	MODEL	LENGTH	MAX. COOKING TEMP.	EXHAUST PLENUM RISER(S) TOTAL EXH. CFM	WIDTH	LENG.	HEIGHT	DIA.	CFM	S.P.	TOTAL SUPPLY CFM	HOOD CONSTRUCTION	END TO END	R.
1		4812 ESX-2	10' 0.00"	600 Deg.	2750	12"	24"	4"		2750	-0.791"	0	430 SS 100%	ALONE	ALO
2	28"W Supply Plenum	286 MISC-PSP	10' 0.00"	300 Deg.	0							2200	430 SS 100%	ALONE	ALO

HOOD INFORMATION

HOOD NO.	TAG	FILTER(S) TYPE	QTY.	HEIGHT	LENGTH	EFFICIENCY @ 9 MICRONS	LIGHT(S) QTY.	TYPE	WIRE GUARD	LOCATION
1		Captrate Solo Filter	7	20"	16"	93% See Filter Spec.	3	Screw In Compact	NO	
2	28"W Supply Plenum						0			

HOOD OPTIONS

HOOD NO.	TAG	OPTION
1		LEFT QUARTER END PANEL 23" Top Width, 0" Bottom Width, 23" High 430 SS
		RIGHT QUARTER END PANEL 23" Top Width, 0" Bottom Width, 23" High 430 SS

PERFORATED SUPPLY PLENUM(S)

HOOD NO.	TAG	POS.	LENGTH	WIDTH	HEIGHT	TYPE	RISER(S) WIDTH	LENG.	DIA.	CFM	S.P.
2	28"W Supply Plenum	Front	120"	28"	6"	MUA	12"	28"		733	0.202"
						MUA	12"	28"		733	0.202"
						MUA	12"	28"		733	0.202"

SPECIFICATION: CAPTRATE® GREASE-STOP® SOLO FILTER

THE CAPTRATE GREASE-STOP SOLO FILTER IS A SINGLE-STAGE FILTER FEATURING A UNIQUE S-BAFFLE DESIGN IN CONJUNCTION WITH A SLOTTED REAR BAFFLE DESIGN, TO DELIVER EXCEPTIONAL FILTRATION EFFICIENCY.

FILTER IS STAINLESS STEEL CONSTRUCTION, AND SIZED TO FIT INTO STANDARD 2-INCH DEEP HOOD CHANNEL(S).

UNITS SHALL INCLUDE STAINLESS STEEL HANDLES AND A FASTENING DEVICE TO SECURE THE TWO COMPONENTS WHEN ASSEMBLED.

GREASE EXTRACTION EFFICIENCY PERFORMANCE SHALL REMOVE AT LEAST 75% OF GREASE PARTICLES FIVE MICRONS IN SIZE, AND 90% GREASE PARTICLES SEVEN MICRONS IN SIZE AND LARGER, WITH A CORRESPONDING PRESSURE DROP NOT TO EXCEED 1.0 INCHES OF WATER GAUGE.

THE CAPTRATE GREASE-STOP SOLO WAS TESTED TO ASTM STANDARD ASTM F2519-05.

FILTER COLLECTION EFFICIENCY 2" Captrate® Grease-Stop® Solo Filter

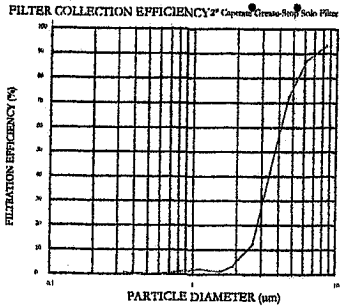

RESISTANCE VS. AIRFLOW - 2" Captrate® Grease-Stop® Solo Filter

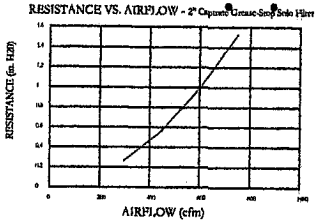

CAPTRATE FILTERS ARE BUILT IN COMPLIANCE WITH:
NFPA #96
NSF STANDARD #2
UL STANDARD #1046
INT. MECH. CODE (IMC)
ULC-S649

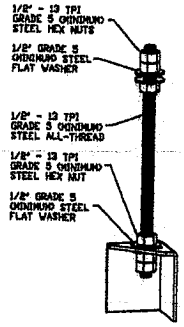

ASSEM

HANGING ANGLE MUST
GRADE 5 (MINIMUM) AL
ANGLES AND CEILING ANCHOR POINTS WITH 1/2" GRADE 5 (MINIMUM) STEEL FLAT WASHERS AND 1/2" - 13 TPI GRADE 5 (MINIMUM) HEX NUTS AS SHOWN. MUST USE DOUBLED HEX NUT CONFIGURATION BENEATH HOOD HANGING ANGLES AND ABOVE CEILING ANCHORS. MAINTAIN 1/4" OF EXPOSED THREADS BENEATH BOTTOM HEX NUT. TORQUE ALL HEX NUTS TO 57 FT-LBS.

HANGING ANGLE MUST BE SUPPORTED WITH 1/2" - 13 TPI GRADE 5 (MINIMUM) ALL-THREAD, SANDWICH HANGING ANGLES AND CEILING ANCHOR POINTS WITH 1/2" GRADE 5 (MINIMUM) STEEL FLAT WASHERS AND 1/2" - 13 TPI GRADE 5 (MINIMUM) HEX NUTS AS SHOWN. MUST USE DOUBLED HEX NUT CONFIGURATION ABOVE CEILING ANCHORS. SINGLE HEX NUT BENEATH HANGING ANGLE IS ACCEPTABLE FOR FULL LENGTH HANGING ANGLES. MAINTAIN 1/4" OF EXPOSED THREADS BENEATH BOTTOM HEX NUT. TORQUE ALL HEX NUTS TO 57 FT-LBS.

SUPPLY PLENUM HANGING ANGLE

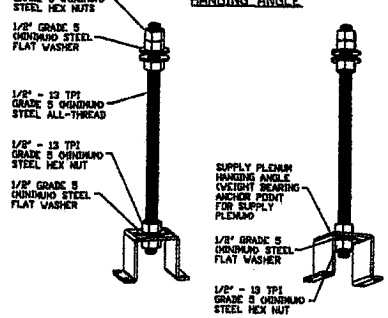

ASSEMBLY INSTRUCTIONS

HANGING ANGLE MUST BE SUPPORTED WITH 1/2" - 13 TPI GRADE 5 (MINIMUM) ALL-THREAD, SANDWICH HANGING ANGLES AND CEILING ANCHOR POINTS WITH 1/2" GRADE 5 (MINIMUM) STEEL FLAT WASHERS AND 1/2" - 13 TPI GRADE 5 (MINIMUM) HEX NUTS AS SHOWN. MUST USE DOUBLED HEX NUT CONFIGURATION ABOVE CEILING ANCHORS. SINGLE HEX NUT BENEATH HANGING ANGLE IS ACCEPTABLE FOR PSP HANGING ANGLES. MAINTAIN 1/4" OF EXPOSED THREADS BENEATH BOTTOM HEX NUT. TORQUE ALL HEX NUTS TO 57 FT-LBS.

CUSTOMER APPROVAL TO MANUFACTURE:

Approved as Noted ☐
Approved with NO Exception Taken ☐
Revise and Resubmit ☐
Rejected ___ Date ___

ECON-AIR

JOB Izakayo Minato r.1	
LOCATION Biddeford, ME,	
DATE 10/11/2016	JOB # 2801168
DWG # 1	DRAWN BY KCD-21
REV	

RESURGAM. CITY OF PORTLAND, MAINE

Reviewed for Code Compliance
Inspections Division
Approved with Conditions

Date: 12/08/16

EXHAUST FAN INFORMATION – Job#2801168

FAN UNIT NO.	TAG	FAN UNIT MODEL #	CFM	ESP.	RPM	H.P.	B.H.P.	ø	VOLT	FLA	WEIGHT (LBS.)	SONES
1		EABDU18	2750	1.200	1116	1.500	1.0620	1	230	6.8	208	13.5

MUA FAN INFORMATION – Job#2801168

FAN UNIT NO.	TAG	FAN UNIT MODEL #	BLOWER	HOUSING	CFM	ESP.	RPM	H.P.	B.H.P.	ø	VOLT	FLA	WEIGHT (LBS.)	SONES
2		EA-A1-G10	G10D	A1	1900	0.350	858	1.000	0.5010	1	230	6.1	262	18.1

FAN OPTIONS

FAN UNIT NO.	TAG	OPTION (Qty. – Descr.)
1		1 – Grease Box
		1 – Full Crating For Exhaust Fans
		1 – 3 Year Extended Motor Warranty
		1 – Extra Set of Belts
		1 – Fan Base Ceramic Seal – For Grease Ducts
		1 – Hinge Kit – Ships Loose for Curb Supplied by Others
2		1 – Full Crating For Untempered Fans
		1 – Wall Mount Option for Size 1 Untempered Fan
		1 – 3 Year Extended Motor Warranty
		1 – Gravity Backdraft Damper for Size 1 Housing
		1 – ECM Wiring Package-Supply Fans Untempered- Manual Speed Control.

FAN ACCESSORIES

FAN UNIT NO.	TAG	EXHAUST			SUPPLY			
		GREASE CUP	GRAVITY DAMPER	WALL MOUNT	SIDE DISCHARGE	GRAVITY DAMPER	MOTORIZED DAMPER	WALL MOUNT
1		YES						
2					YES	YES		YES

FAN #1 EABDU18 – EXHAUST FAN

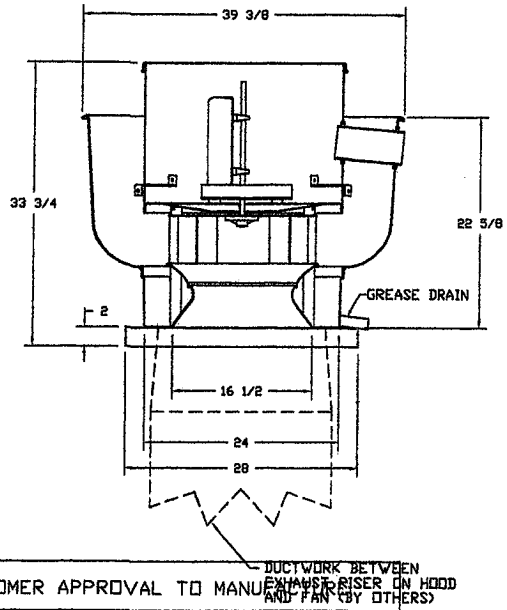

FEATURES:

- ROOF MOUNTED FANS
- RESTAURANT MODEL
- UL705 AND UL762
- AMCA SOUND AND AIR CERTIFIED
- WIRING FROM MOTOR TO DISCONNECT SWITCH
- WEATHERPROOF DISCONNECT
- HIGH HEAT OPERATION 300°F (149°C)
- GREASE CLASSIFICATION TESTING

NORMAL TEMPERATURE TEST
EXHAUST FAN MUST OPERATE CONTINUOUSLY WHILE EXHAUSTING AIR AT 300°F (149°C) UNTIL ALL FAN PARTS HAVE REACHED THERMAL EQUILIBRIUM, AND WITHOUT ANY DETERIORATING EFFECTS TO THE FAN WHICH WOULD CAUSE UNSAFE OPERATION.

ABNORMAL FLARE-UP TEST
EXHAUST FAN MUST OPERATE CONTINUOUSLY WHILE EXHAUSTING BURNING GREASE VAPORS AT 600°F (316°C) FOR A PERIOD OF 15 MINUTES WITHOUT THE FAN BECOMING DAMAGED TO ANY EXTENT THAT COULD CAUSE AN UNSAFE CONDITION.

OPTIONS

GREASE BOX
FULL CRATING FOR EXHAUST FANS
3 YEAR EXTENDED MOTOR WARRANTY
EXTRA SET OF BELTS
FAN BASE CERAMIC SEAL – FOR GREASE DUCTS
HINGE KIT – SHIPS LOOSE FOR CURB SUPPLIED BY OTHERS

CUSTOMER APPROVAL TO MANUFACTURE

Approved as Noted ☐
Approved with NO Exception Taken ☐
Revise and Resubmit ☐
SIGNATURE _____
Your Title _____ Date _____

RESURGAM. CITY OF PORTLAND, MAINE

Reviewed for Code Compliance
Inspections Division
Approved with Conditions

Date: 12/08/16

ECON-AIR

JOB Izakaya Minato n.1
LOCATION Biddeford, ME
DATE 1/11/15
JOB # 2801168
DWG #
DRAWN BY KCD-21

FAN #2 EA-A1-G10
1. DIRECT DRIVE I[illegible] DRIVE UNTEMPERED SUPPLY UNIT WIT[illegible] BLOWER IN SIZE #1 HOUSING WITH SPEED CONTROL DISCONNECT SWITCH.
2. INTAKE HOOD WITH EZ FILTERS-LOW CFM
3. SIDE DISCHARGE - AIR FLOW RIGHT -> LEFT
4. FULL CRATING FOR UNTEMPERED FANS FOR SHIPPING.
5. WALL MOUNT OPTION FOR SIZE 1 UN-TEMPERED MAKE-UP AIR FAN. 32" LONG ANGLE IRON FRAME.
6. 3 YEAR EXTENDED WARRANTY FOR FAN MOTOR. PARTS ONLY; DOES NOT INCLUDE LABOR.
7. GRAVITY BACK DRAFT DAMPER, 16" WIDE X 18" HIGH, STANDARD GALVANIZED CONSTRUCTION, 1 1/4" REAR FLANGE, F[illegible] 1 UNTEMPERED FAN HOUSING (5181)
8. ECM WIRING PACKAGE AND MANUAL CONTROL FOR ECM MOTORS ON SUPPLY PRVS.

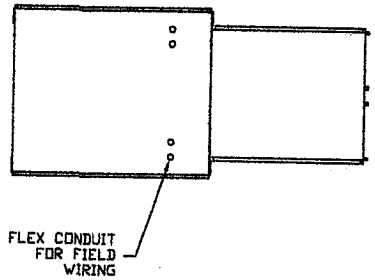

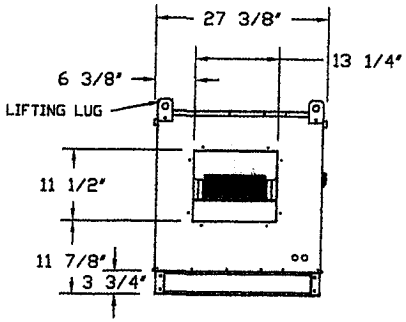

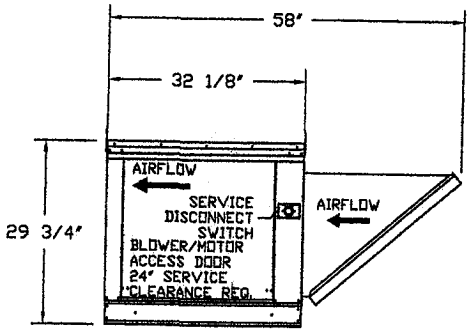

Untemper

Reviewed for Code Compliance
Inspections Division
Approved with Conditions

Date: 12/08/16

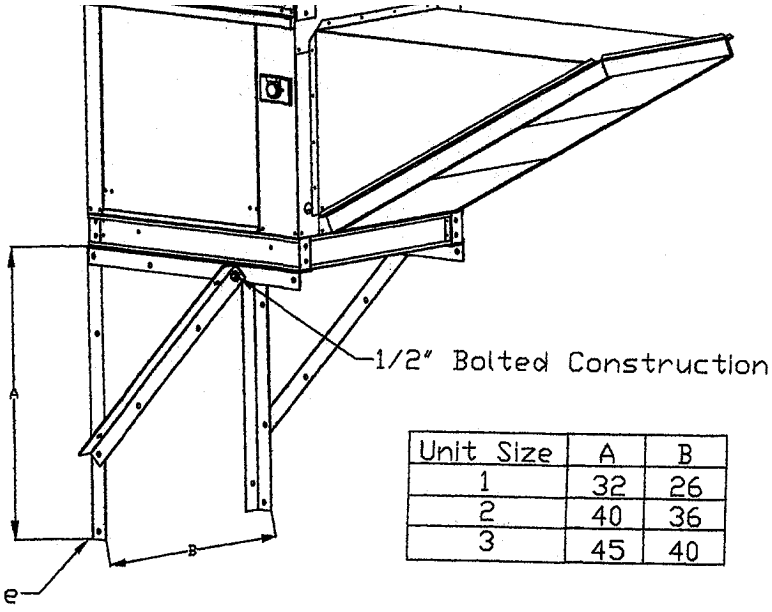

Unit Size	A	B
1	32	26
2	40	36
3	45	40

CUSTOMER APPROVAL TO MANUFACTURE:

Approved as Noted ☐
Approved with NO Exception Taken ☐
Revise and Resubmit ☐
SIGNATURE _____
Your Title _____ Date _____

ECON-AIR

JOB Izakaya Minato r.1
LOCATION Biddeford, ME
DATE 10/11/2016 JOB # 2801168
DWG # 5 DRAWN BY KCD-21

Fire Barrier Duct Wrap 61

Duct Wrap Fire Protection System for (and Ventilation Air Ducts

Product Data

CLASSIFIED UL — BATTS AND BLANKETS FOR USE IN FIRE RESISTIVE DUCT ASSEMBLIES SEE UL FIRE RESISTANCE DIRECTORY

LISTED UL — DUCT INSULATION

LISTED — FIRESTOP SY SEE INTERTEK D

RESURGAM. CITY OF PORTLAND, MAINE

Reviewed for Code Compliance
Inspections Division
Approved with Conditions

Date: 12/08/16

1. Product Description

3M™ Fire Barrier Duct Wrap 615+ is a fire resistant wrap consisting of an inorganic fiber blanket encapsulated with a scrim-reinforced foil. The product is 1-1/2 in. thick, 6pcf density.[1] It is used to fire rate commercial kitchen grease ducts as well as ventilation ducts, and is a proven alternative to 1 or 2 hour fire resistant rated shaft enclosures. With its excellent insulating capabilities, low weight and thin profile, it is and ideal choice for a duct enclosure system. This non-asbestos wrap installs easily because of its high flexibility and strength.

Features

- Two-layer wrap for grease ducts rated as a shaft alternative per ASTM E 2336
- Zero clearance to combustible throughout the entire enclosure system for congested spaces
- One-layer wrap for fire-resistive ventilation ducts per ISO 6944
- High flexibility for installation ease
- Foil encapsulated for blanket protection, less dust, and high wrap strength
- Widest range of penetration seal systems

2. Applications

Two-layer application criteria of ASTM E 23 Grease Duct Enclosu

3M™ Fire Barrier Duct has passed the ISO 69

3M™ Fire Barrier Duc for commercial kitchen grease ducts and ventilation air ducts. It is a proven performance alternative to a 1 or 2 hour fire resistant rated shaft enclosures and provides zero clearance to combustible construction throughout the entire enclosure system. 3M™ Fire Barrier Water Tight Sealant 1000 NS, 3M™ Fire Barrier Water Tight Sealant 1003 SL or 3M™ Fire Barrier Water Tight Sealant 2000+ Silicone Sealants is used in combination with 3M™ Fire Barrier Duct Wrap 615+ to firestop the duct when the duct penetrates fire rated floors and walls.

3. Availability

Unit	Size	Quantity	Weight
Roll	24 in. x 25 ft. (60,9 mm x 635 cm)	1	45 lbs (20.4 kg)
Roll	48 in. x 25 ft. (121 cm x 635 cm)	1	90 lbs (40.8 kg)

4. Typical Physical Properties

Blanket Color	Weight
White	0.9 lbs./ft.^{2} (4.38 kg/m^2)

[1] In accordance with the tolerances in ASTM C 892 Standard Specification for High-Temperature Fiber Blanket Thermal Insulation.

ROXUL

The Better Insulation

(wall and top of Hood)

Technic
BOARD
RHT 80
Architec

General Product Information:

ROXUL products are mineral wool fibre insulations made from basalt rock and steel slag. This combination results in a non-combustible product with a melting point of approximately 2150°F (1177°C), which gives it excellent fire resistance properties. ROXUL mineral wool is a water repellent yet vapour permeable material. It absorbs water only when water is pressed or forced into the material and once the pressure is relieved, the water will evaporate without any loss of integrity to the material's shape or insulating properties.

All ROXUL products are certified to carry the Environmental Choide logo.

Descriptio

The RHT 80 p
eral wool insul
delivers excep
in a diversity o
applications. F
non-combustib
the ideal choic
product can be
of building enve
acoustic and O

RESURGAM. CITY OF PORTLAND, MAINE

Reviewed for Code Compliance
Inspections Division
Approved with Conditions

Date: 12/08/16

Compliance and Performance

ASTM C 612	Mineral Fiber Block and Board Thermal Insulation	Type IV, Complies
CAN/CGSB 51.10-92	Mineral Fibre Board Thermal Insulation	Type 1, Class 4
FSA Approval	New York City Approval	332-97-M
Fire Performance		
ASTM E 136	Behaviour of Materials at 750°C (1382°F)	Non-Combustible
CAN4 S114	Test for Non-Combustibility	Non-Combustible
UL 723	Surface Burning Characteristics	Flame Spread = 0
(ASTM E 84)		Smoke Developed = 0
CAN/ULC S102	Surface Burning Characteristics	Flame Spread = 0
		Smoke Developed = 0
Maximum Service Temperature		
ASTM C 411	Hot Surface Performance	No Reaction @ 1200°F (650°C)
Dimensional Stability		
ASTM C 356	Linear Shrinkage	1.24% @ 1200°F (650°C)
Moisture Resistance		
ASTM C 1104	Moisture Sorption	0.04%
Corrosion Resistance		
ASTM C 665	Corrosiveness to Steel	Passed
ASTM C 795	For use with Austenitic Stainless Steel	No Reaction
ASTM C 871	Chemical Analysis	Passed
Thermal Resistance		
ASTM C 518 (C 177)	R-value @ 75°F (24°C)	4.2/inch
	k-value @ 75°F (24°C)	0.24 Btu.in/ft².hr.°F

Supercedes: 11 January 1999
Revised: 23 April 1999

Access Doors– High

Access Doors For Round and Flat Duct Work

Specifications

- Tested to 20" w.g., with no leakage noted.
- Available in 10x6 and 16x12.
- Metal Thickness: 10x06 16 ga. Black iron
- 16x12 16 ga. Black iron
- Ceramic fiber rope (1,000° max) or ceramic fiber gasket (2,300°, Meets NFPA 96) ensures an air tight seal
- Zinc coated wing nuts are easily turned by hand
- Self adhesive template is provided for easy installation.
- Zinc coated conical springs installed between the inner and outer door.

RESURGAM. CITY OF PORTLAND, MAINE

Reviewed for Code Compliance
Inspections Division
Approved with Conditions

Date: 12/08/16

Packaging

- Access Doors are sold as single units.

Profile

- Available sizes: 10x06 Flat
  16x12 Flat
  10x06x 6" through 30"
  16x12x 18" through 60"

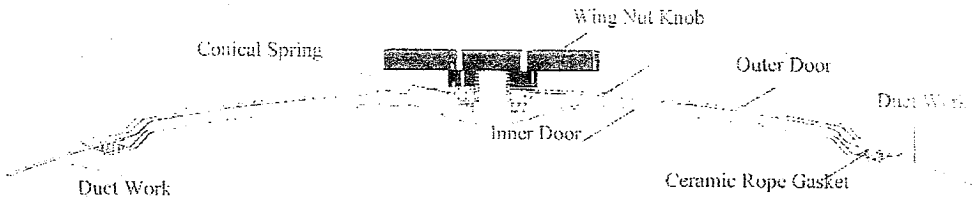

Installation Instructions

1. Adhere self adhesive template to ductwork.
2. Using a pair of sheet metal snips, cut out the template.
3. Unscrew knobs of door and insert into the opening
4. Tighten knobs.

C.L. WARD
& FAMILY INC.
SMACNA
888.973.7600
www.clward.com