17-0229
123 Cumberland Ave.
Portland, ME

STRUCTURAL GENERAL NOTES

DESIGN LOADS: International Building Code; IBC 2009 Edition, except as noted
Occupancy Category, Table 1604.5 II Standard

Roofs:

Ground Snow,	P_g		60 psf (used for drifting calculations)
Snow Exposure Factor	Ce	Table 1608.3.1	1.0
Snow Importance Factor,	Is	Table 1604.5	1.0
Snow Thermal Factor,	Ct	Table 1608.3.2	1.0

Floors:
Residential 40 psf

Lateral
Wind IBC 1603.1.4, ASCE 7-10 Analytic Method
3 Second Gust Velocity 140 mph
Importance Factor 1.0
Building Category and Internal Pressure Coefficient
IBC 1609.2, ASCE Figure 6-3 Enclosed
Exposure C

STRUCTURAL STEEL:

Structural steel shall be detailed, fabricated, and erected in accordance with latest AISC Specifications, and Code of Standard Practice.
Structural steel wide flange beams shall conform to ASTM A992.
Except as noted, framed beam connections shall be bearing-type with 3/4" diameter, snug tight, A490-N bolts, detailed in conformance with Part 4, Tables II and III, for 0.6 times the allowable uniform loads tabulated in Part 2 of the AISC Manual, 9th Edition. Install bolts in accordance with AISC "Specification for Structural Joints Using ASTM A325 or A490 Bolts".
All beams shall have full depth web stiffeners each side of webs above and below columns
Anchor rods shall conform to ASTM F1554, Grade 55), with weldability supplement S1.
Headed anchor studs (HAS) shall be attached to structural steel with equipment approved by the stud manufacturer according to the stud manufacturer's recommendations.
Welding shall be done by a certified welder in accordance with AISC and AWS specifications and recommendations using E70-electrodes. Where not specifically noted, minimum weld shall be 3/16" fillet by length of contact edge.
All post-installed anchors shall have current National Evaluation Report, and shall be installed in accordance with the manufacturer's requirements.
Expansion anchors shall be approved "wedge" type unless specifically noted to be "sleeve" type.
Chemical anchors shall be approved epoxy or similar adhesive type and shall have current National Evaluation Report. Where base material is not solid, approved screen tubes shall be used.
Grout beneath column base and beam-bearing plates shall be
minimum 28-day compressive strength of 7,500 psi,
approved pre-bagged, non-metallic, non-gaseous, bleed free,
non-shrink, when tested in accordance with ASTM C1107
Grade B or C at a flow cone fluid consistency of 20 to 30 seconds

STRUCTURAL WOOD FRAMING:

In-Grade Base Values have been used for design
2x framing shall be Spruce-Pine-Fir S4S No. 2 and better unless noted.
All lumber shall be 19% maximum moisture content, unless noted.
Solid timber beams and posts shall be Douglas Fir-Larch No. 1.
Studs shall be Spruce-Pine-Fir S4S No. 2 and better.
Top and bottom plates shall be Spruce-Pine-Fir S4S No. 2 and better.
Wood in contact with concrete shall be pressure-treated Spruce-Pine-Fir S4S No. 2 or Southern Yellow Pine.
Conventional light framing shall comply with IBC Section 2308.
Except as noted otherwise, minimum nailing shall be provided as specified in IBC Table 2304.9.1 "Fastening Schedule."
All plywood and oriented strand board (OSB) sheathing shall be engineered grades with APA grade stamp indicating appropriate maximum spacing of supports.
Floor sheathing: nominal 3/4", APA Sturd-I-Floor "24" tongue & groove glued and nailed.
Roof sheathing: minimum 5/8" CDX plywood, or 5/8" OSB, APA 32/16, nailed.
Wall sheathing: 1/2" CDX plywood or 7/16" OSB, APA 24/16, blocked and nailed.
Nail wall sheathing with 8d commons at 4" o.c. at panel edges, and 12" o.c. at intermediate framing except as noted.
Sheath all exterior walls. Sheath interior walls as shown on the drawings. Block and nail all sheathing panel edges between studs.
Sheathing shall be continuous from bottom plate to top plate. Cut in "L" and "T" shapes around openings. Lap sheathing over rim joists min. 4" at all floors to tie upper and lower stud walls together.
Minimum height of sheathing panels shall be 16" to assure that plates are tied to studs.
Minimum 3-8d per stud and nail plates with "edge nail" spacing.
Sole plate at all perimeter walls and at designated shear walls shall be nailed as for braced panels with 3-16d x 3 1/2" long box nails (coated or deformed shank) per 16". 12d nails are not acceptable.
Provide solid blocking between joists under jamb studs of openings.
Pre-engineered, prefabricated trusses shall be designed for the fabricator by a Professional Engineer Registered in the State of construction, and shall comply with Code Requirements.
Truss to truss connections specified shall be by truss supplier, unless specifically noted on the drawings.
Lower chord of gable end trusses shall be anchored to wall plate with framing anchors at 4'-0 spacing and laterally braced to roof framing at 8'-0 spacing.
Truss supplier shall specify all floor and roof truss bracing and bridging.
All roof rafters, joists, trusses, and beams shall be anchored to supports with metal framing anchors.
Light gage framing anchors shown or required, shall be Simpson "Strong Tie" or equal Code approved connectors and installed with the number and type of nails recommended by the manufacturer to develop the rated capacity.
Note that heavy-duty hangers and skewed hangers may not be stocked locally and require special order from the factory.
All beams and trusses shall be braced against rotation at points of bearing.
Unless otherwise indicated, install two lengths of solid blocking x joist depth x 12 inches long in floor framing under column loads.
Columns must have a continuous load path to foundation.
Lead holes for lag screws shall be drilled in accordance with Table 6.23 of the AITC Timber Construction Manual, 3rd edition.

FOUNDATION DESIGN:

Foundations are designed without an engineer's soil investigation. Foundation design criteria was assumed for purpose of foundation design and shall be confirmed by a soils engineer, at owner's expense, prior to construction. (This procedure may require revisions to foundation design, at additional expense to the owner, if soils engineer determines that such design criteria are inappropriate for this building site.)

--Footings--
Design of footings is based on a maximum allowable bearing pressure of 1,500 psf
Bear on the natural undisturbed soil, or compacted structural fill tested and approved by a soils engineer, below frost depth.

SHOP DRAWINGS:

Construction Documents are copyrighted and shall not be copied for use as erection plans or shop details.
Use of SI Inc.'s electronic files as base for shop drawings requires prior approval by SI Inc.
signed release of liability by subcontractor,
payment of an administration fee of $100 per drawing sheet to SI Inc, and
deletion of SI Inc's name and Logo from all sheets so used.
The General Contractor and his subcontractors shall submit in writing any requests to modify the plans or specifications.
All shop and erection drawings shall be checked and stamped by the General Contractor prior to submission for Engineer's review.
Unchecked submittals will be returned without review.
Furnish one (1) reproducible and two (2) prints of shop and erection drawings to the Structural Engineer for review prior to fabrication for reinforcing steel and structural steel.
Submit in a timely manner to permit ten (10) working days for review.
Shop drawings submitted for review do not constitute "in writing" unless specific suggested changes are clearly marked.
In any event, such changes by means of the shop drawing submittal process become the responsibility of the one initiating such change.

FIELD VERIFICATION OF EXISTING CONDITIONS:

Contractor shall thoroughly inspect and survey existing structure to verify conditions that affect the work shown on the drawings.
Contractor shall report any variations or discrepancies to the Architect before proceeding.

STRUCTURAL ERECTION AND BRACING REQUIREMENTS:

The structural drawings illustrate the completed structure with elements in their final positions, properly supported and braced.
These construction documents contain typical and representative details to assist the contractor.
Details shown apply at all similar conditions unless otherwise indicated.
Although due diligence has been applied to make the drawings as complete as possible, not every detail is illustrated, nor is every exceptional condition addressed.
All proprietary connections shall be installed in accordance with the manufacturers' recommendations.
All work shall be accomplished in a workmanlike manner and in accordance with the applicable code and local ordinances.
The general contractor is responsible for coordination of all work, including layout and dimension verification, materials coordination, shop drawing review, and the work of subcontractors.
Any discrepancies or omissions discovered in the course of the work shall be immediately reported to the architect for resolution.
Continuation of work without notification of discrepancies relieves the architect and engineer from all consequences.
Unless otherwise specifically indicated, the drawings do not describe methods of construction.
The contractor, in the proper sequence, shall perform or supervise all work necessary to achieve the final completed structure, and to protect the structure, workmen, and others during construction.
Such work shall include, but not be limited to, bracing, shoring for construction equipment, shoring for excavation, formwork, scaffolding, safety devices and programs of all kinds, support and bracing for cranes and other erection equipment.
Do not backfill against basement or retaining walls until supporting slabs and floor framing are in place and securely anchored, unless adequate bracing is provided.
Temporary bracing shall remain in place until all floors, walls, roofs and any other supporting elements are in place.
The architect and engineer bear no responsibility for the above items, and observation visits to the site do not in any way include inspection of them.

REINFORCED CONCRETE:

We encourage the use of blast furnace slag.
Design is based on "Building Code Requirements for Reinforced Concrete"(ACI 318). Concrete work shall conform to "Standard Specifications for Structural Concrete" (ACI 3019).
Structural concrete shall have the following properties:

Intended Use	f'c, psi 28day	Max W/C Ratio	Maximum Aggregate	Slump inches	Entrained Air Percent ±1.5%	Cement Type	Admixtures, Comments
footings	3,500	.6	¾" Stone	4	---	I/II	
walls	4,000	.45	¾" Stone	4	6%	I/II	
struct slab on deck	4,000	.5	¾" Stone	4	---	I/II	WWR per plan
formed struct slab	4,000	.45	¾" Stone	4	3%	I/II	WWR per plan
exterior slab on grade	4,500	.45	¾" Stone	4	6%	I/II	Fibermesh
interior slabs on grade	3,500	.5	¾" Stone	4	---	I/II	Fibermesh
beams, columns	4,000	.45	¾" Stone	4	6%	I/II	

Detailing, fabrication, and placement of reinforcing steel shall be in accordance with the Manual of Standard Practice for Detailing Reinforced Concrete Structures (ACI 315).
Welded wire fabric shall conform to ASTM A185.
Reinforcing bars shall conform to ASTM A615.
Grade 60,
except ties or bars shown to be field-bent, which shall be Grade 40.
Epoxy coated reinforcing bars shall conform to ASTM 775.
Zinc coated (galvanized) reinforcing bars shall conform to ASTM 767.
Bars to be welded shall conform to ASTM 706.
At splices, lap bars 50 diameters unless noted otherwise.
At corners and intersections, make horizontal bars continuous or provide matching corner bars.
Around openings in walls and slabs, provide 2-#5, extending 2'-0 beyond edge of opening.
In continuous members, splice top bars at mid-span and splice bottom bars over supports.
Provide intermittent shear keys at all construction joints and elsewhere as shown on the drawings.
Except as noted on the drawings, concrete protection for reinforcement in cast-in-place concrete shall be as follows:
a. Cast against and permanently exposed to earth 3"
b. Exposed to earth or weather:
#6 through #18 bars 2"
#5 bar, W31 or D31 wire, and smaller 1-1/2"
c. Not exposed to weather or in contact with ground:
Slabs, walls, joists: #11 bar and smaller 3/4"
Beams, columns:
Primary reinforcement 1-1/2"
Stirrups, ties, spirals 1-1/2"
Fibremesh admixture shall be 100% virgin polypropylene, fibrillated fibers as manufactured by Fibremesh Co. per ASTM C-1116 type III 4.1.3 and ASTM C-1116 performance level one. 1.5 lbs per cubic yard of concrete.
Anchor bolts and rods for beam and column-bearing plates shall be placed with setting templates.
Permanent corrugated steel forms for concrete floor slabs shall be manufactured and erected according to the "Specifications and Code of Standard Practice" of the Steel Deck Institute.
All concrete work is subject to inspection by a qualified special inspector employed by the owner in accordance with IBC Section 1704.4.

Structural Drawing Index

S0.1	General Notes, Etc.
S1.1	Foundation Plan
S1.2	First Floor Framing Plan
S1.3	Second Floor Framing Plan
S1.4	Third Framing Plan
S1.5	Roof Framing Plan
S2.1	Sections
S2.2	Sections
S2.3	Sections
S2.4	Sections
S2.5	Sections

STATE OF MAINE
AARON C. JONES
No. 10968
LICENSED
PROFESSIONAL ENGINEER
03/01/18

Reviewed for Code Compliance
Inspections Division
Approved with Conditions
Date: 05/02/18

Structural Integrity
Consulting Engineers, Inc.
46 Forest Avenue
Portland, ME, 04101
p. 207-774-4644
f. 866-793-7835
www.structuralintegr.com

BUILD WITH CONFIDENCE
©2018 Structural Integrity Consulting Engineers, Inc.

SI# 17-0229

Rachel Conly Design LLC
26 Sterling Street
Peaks Island, Maine 04108
207.766.5625
www.rachelconlydesign.com

DATE	NOTES
2017.03.01	ISSUED FOR PERMIT

Renovations to
123 Cumberland Ave.
Portland, ME

GENERAL NOTES

S0.1

Reviewed for Code Compliance
Inspections Division
Approved with Conditions
Date: 05/02/18

FOUNDATION LEGEND

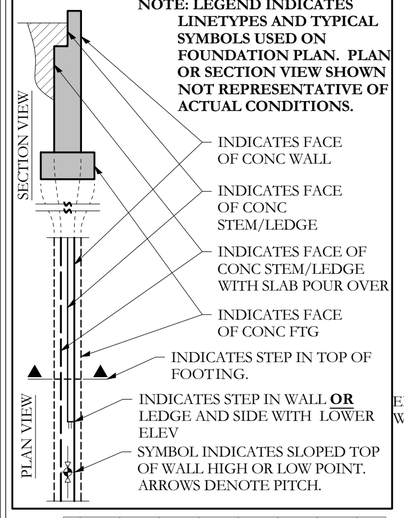

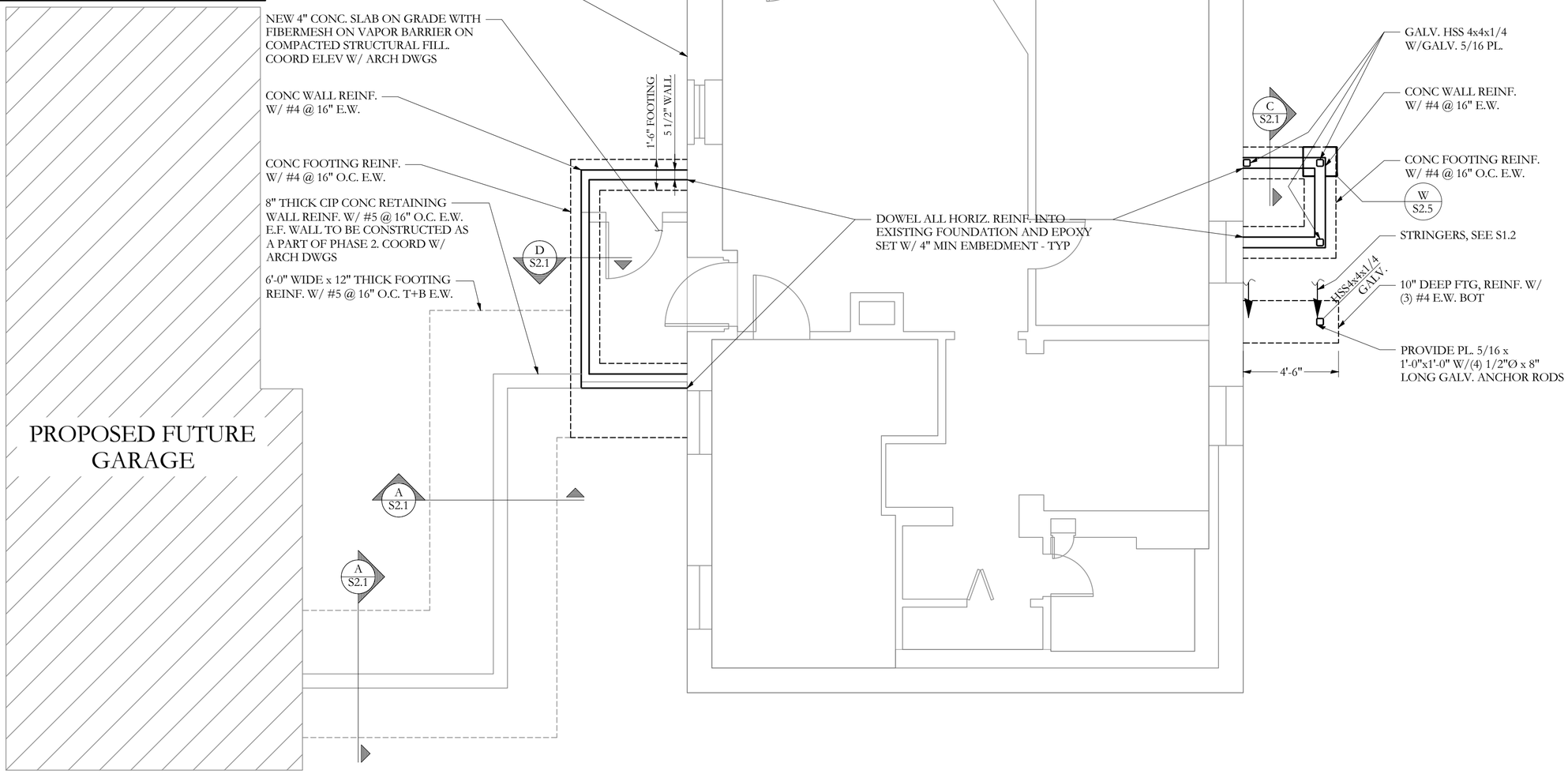

FOUNDATION PLAN

NOTES: **SCALE 1/4"=1'-0"**

1. SEE SHEET S-1.0 FOR GENERAL STRUCTURAL NOTES
2. ALL FOOTINGS ARE 10" DEEP x 1'-8" WIDE x CONT. WITH (2) #5 LONGITUDINAL BARS TOP AND BOTTOM. PROVIDE #4 TRAVERSE BARS @ 32" O.C.
3. STEP IN TOP OF WALL IS INDICATED THUS: , AND SHOWS THE LOWER SIDE OF THE WALL.
4. STEPS IN TOP OF FOOTING IS INDICATED THUS: , AND SHOWS THE LOWER FOOTING.
5. TOP OF FOOTING ELEV. = XX'-XX", UNLESS INDICATED THUS: (XX'-XX"), COORDINATE BOTTOM OF FOOTING ELEVATION W/ GRADING PLAN AND SOILS REPORT REQUIREMENTS.
6. BOTTOM OF ALL FOOTINGS TO BE 4'-6" MIN BELOW EXTERIOR GRADE - TYP. UNO.

STATE OF MAINE
AARON C. JONES
No. 10968
LICENSED
PROFESSIONAL ENGINEER
03/01/18

Structural Integrity
Consulting Engineers, Inc.
46 Forest Avenue
Portland, ME 04101
p. 207-774-4614
f. 866-713-7835
www.structuralintegr.com

BUILD WITH CONFIDENCE
©2018 Structural Integrity Consulting Engineers, Inc.

SI# 17-0229

Rachel Conly Design LLC
26 Sterling Street
Peaks Island, Maine 04108
207.766.5625
www.rachelconlydesign.com

DATE	NOTES
2017.03.01	ISSUED FOR PERMIT

Renovations to
123 Cumberland Ave.
Portland, ME

FOUNDATION PLAN

S1.1

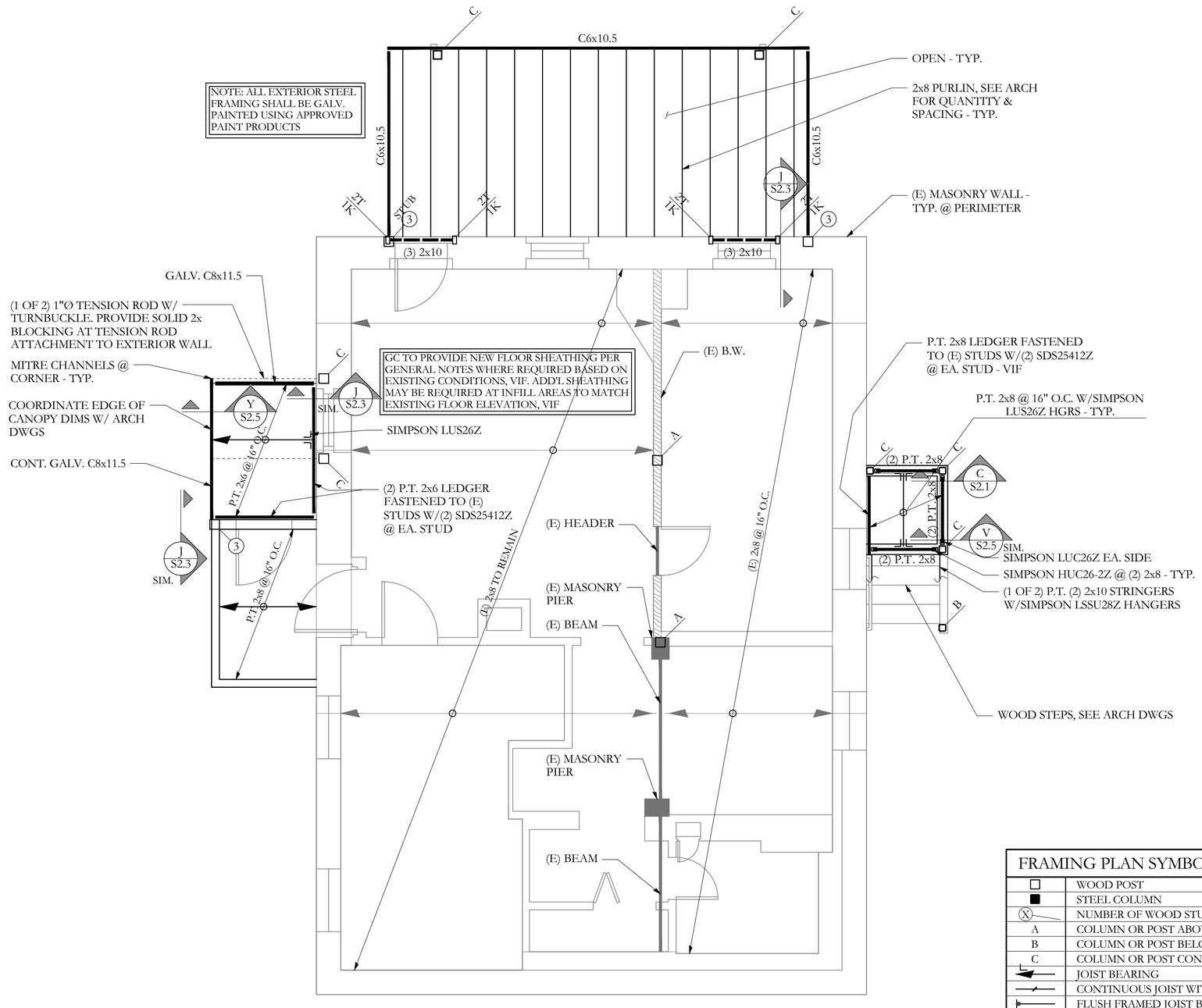

FRAMING PLAN SYMBOLS KEY	
□	WOOD POST
■	STEEL COLUMN
(X)	NUMBER OF WOOD STUDS IN POST BELOW
A	COLUMN OR POST ABOVE THIS LEVEL.
B	COLUMN OR POST BELOW THIS LEVEL.
C	COLUMN OR POST CONT. THROUGH THIS LEVEL.
	JOIST BEARING
	CONTINUOUS JOIST WITH INTERMEDIATE BEARING
	FLUSH FRAMED JOIST BEARING WITH HANGER
	WOOD STUD BEARING WALL BELOW
	WOOD STUD SHEAR WALL BELOW
	WOOD STUD BEARING WALL ABOVE
	HATCHING INDICATES OVER FRAMING BY OTHERS -TYP
"X"T	NUMBER OF TRIM STUDS UNDER HEADER
"X"K	NUMBER OF KING STUDS ADJACENT TO HEADER
	INDICATES FLUSH TOP BEAM MEMBER UNO
	INDICATES DROPPED BEAM MEMBER
	INDICATES BEAM BEARING W/ HANGER -TYP

FIRST FLOOR FRAMING PLAN

SCALE 1/4"=1'-0"

NOTES:

1. SEE SHEET S-1.0 FOR GENERAL STRUCTURAL NOTES
2. ALL WOOD COLUMNS IN 2x6 WALLS SHALL BE 3-2x6 AND IN 2x4 WALLS SHALL BE 3-2x4 UNLESS NOTED OTHERWISE ON PLANS
3. ALL BEAMS ARE FLUSH, UNO
4. ALL HEADERS IN INTERIOR 2x BEARING WALLS ARE 2-2x6, UNO
5. ALL HEADERS IN EXTERIOR 2x BEARING WALLS ARE 3-2x6, UNO
6. FLOOR SHEATHING TO BE 3/4" T+G, SEE GENERAL NOTES FOR ADDITIONAL INFORMATION -TYP

STATE OF MAINE
AARON C. JONES
No. 10968
LICENSED
PROFESSIONAL ENGINEER
03/01/18

Structural Integrity
Consulting Engineers, Inc.
46 Forest Avenue
Portland, ME 04101
p. 207-774-4614
f. 866-713-7835
www.structuralintegr.com

BUILD WITH CONFIDENCE
©2018 Structural Integrity Consulting Engineers, Inc.

SI# 17-0229

Rachel Conly Design LLC
26 Sterling Street
Peaks Island, Maine 04108
207.766.5625
www.rachelconlydesign.com

DATE	NOTES
2017.03.01	ISSUED FOR PERMIT

Renovations to 123 Cumberland Ave, Portland, ME

FIRST FLOOR FRAMING PLAN

S1.2

Reviewed for Code Compliance
Inspections Division
Approved with Conditions
Date: 05/02/18

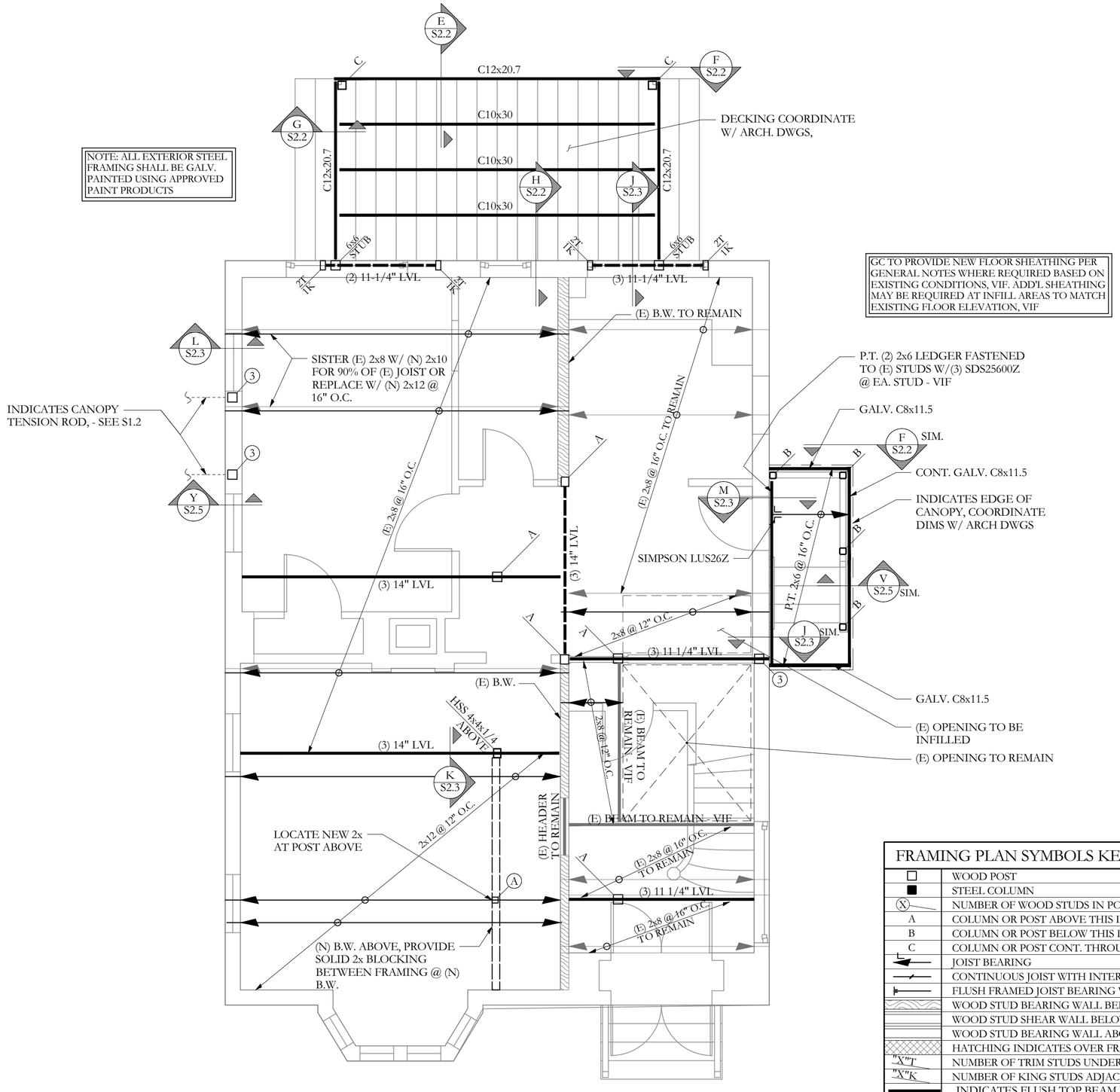

FRAMING PLAN SYMBOLS KEY

□	WOOD POST
■	STEEL COLUMN
X	NUMBER OF WOOD STUDS IN POST BELOW
A	COLUMN OR POST ABOVE THIS LEVEL.
B	COLUMN OR POST BELOW THIS LEVEL.
C	COLUMN OR POST CONT. THROUGH THIS LEVEL.
	JOIST BEARING
	CONTINUOUS JOIST WITH INTERMEDIATE BEARING
	FLUSH FRAMED JOIST BEARING WITH HANGER
	WOOD STUD BEARING WALL BELOW
	WOOD STUD SHEAR WALL BELOW
	WOOD STUD BEARING WALL ABOVE
	HATCHING INDICATES OVER FRAMING BY OTHERS -TYP
"X"T	NUMBER OF TRIM STUDS UNDER HEADER
"X"K	NUMBER OF KING STUDS ADJACENT TO HEADER
	INDICATES FLUSH TOP BEAM MEMBER UNO
	INDICATES DROPPED BEAM MEMBER
	INDICATES BEAM BEARING W/ HANGER -TYP

SECOND FLOOR FRAMING PLAN

SCALE 1/4"=1'-0"

NOTES:

1. SEE SHEET S-1.0 FOR GENERAL STRUCTURAL NOTES
2. ALL WOOD COLUMNS IN 2x6 WALLS SHALL BE 3-2x6 AND IN 2x4 WALLS SHALL BE 3-2x4 UNLESS NOTED OTHERWISE ON PLANS
3. ALL BEAMS ARE FLUSH, UNO
4. ALL HEADERS IN INTERIOR 2x BEARING WALLS ARE 2-2x6, UNO
5. ALL HEADERS IN EXTERIOR 2x BEARING WALLS ARE 3-2x6, UNO
6. FLOOR SHEATHING TO BE 3/4" T+G, SEE GENERAL NOTES FOR ADDITIONAL INFORMATION -TYP

STATE OF MAINE
AARON C. JONES
No. 10968
LICENSED
PROFESSIONAL ENGINEER
03/01/18

Structural Integrity
Consulting Engineers, Inc.
46 Forest Avenue
Portland, ME 04101
p. 207-774-4614
f. 866-718-7835
www.structuralintegr.com

BUILD WITH CONFIDENCE

©2018 Structural Integrity Consulting Engineers, Inc.

SI# 17-0229

Reviewed for Code Compliance
Inspections Division
Approved with Conditions
Date: 05/02/18

Rachel Conly Design LLC
26 Sterling Street
Peaks Island, Maine 04108
207.766.5625
www.rachelconlydesign.com

DATE	NOTES
2017.03.01	ISSUED FOR PERMIT

Renovations to
123 Cumberland Ave.
Portland, ME

SECOND FLOOR FRAMING PLAN

S1.3

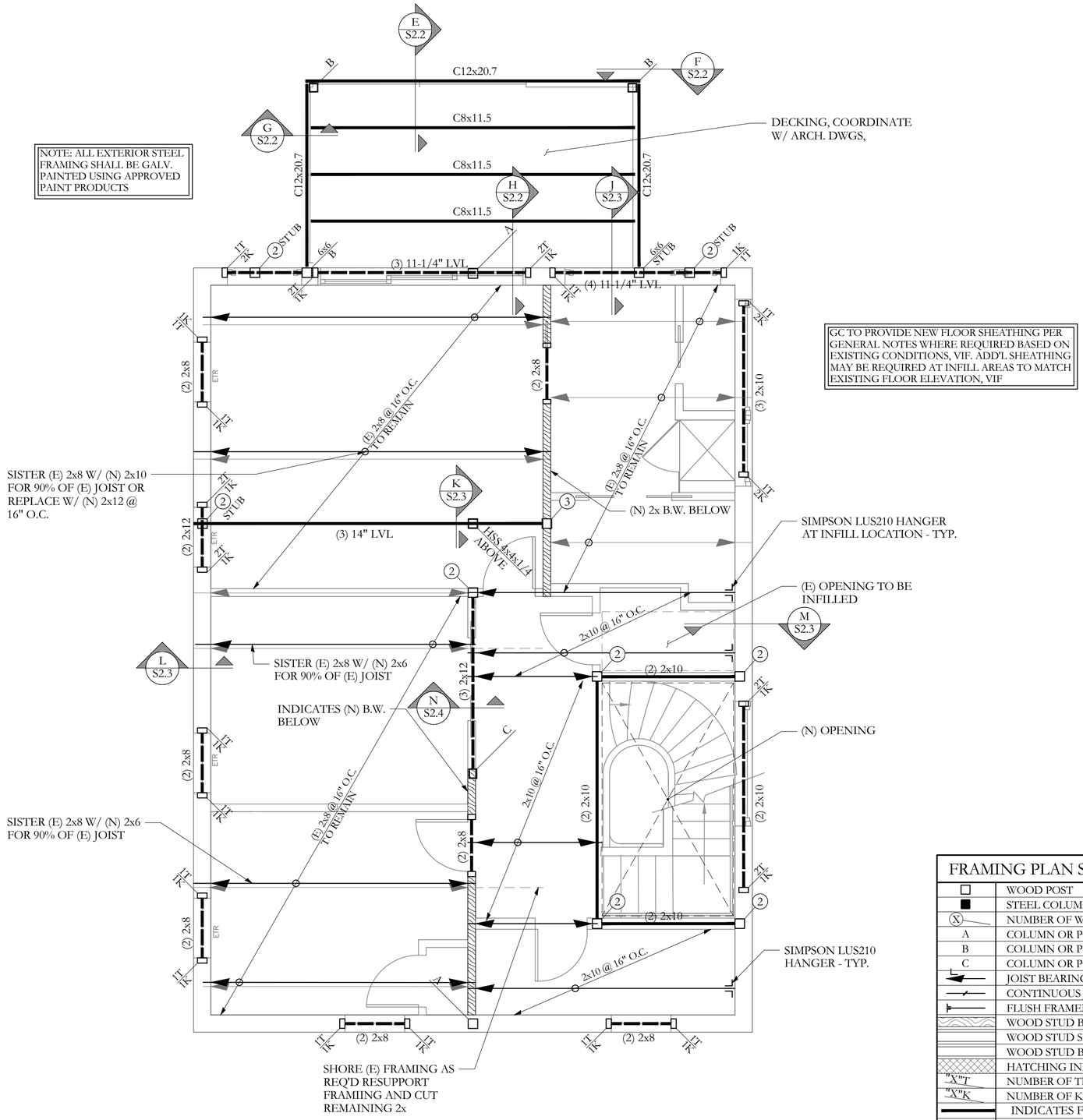

FRAMING PLAN SYMBOLS KEY

□	WOOD POST
■	STEEL COLUMN
(X)	NUMBER OF WOOD STUDS IN POST BELOW
A	COLUMN OR POST ABOVE THIS LEVEL.
B	COLUMN OR POST BELOW THIS LEVEL.
C	COLUMN OR POST CONT. THROUGH THIS LEVEL.
	JOIST BEARING
	CONTINUOUS JOIST WITH INTERMEDIATE BEARING
	FLUSH FRAMED JOIST BEARING WITH HANGER
	WOOD STUD BEARING WALL BELOW
	WOOD STUD SHEAR WALL BELOW
	WOOD STUD BEARING WALL ABOVE
	HATCHING INDICATES OVER FRAMING BY OTHERS -TYP
"X"T	NUMBER OF TRIM STUDS UNDER HEADER
"X"K	NUMBER OF KING STUDS ADJACENT TO HEADER
	INDICATES FLUSH TOP BEAM MEMBER UNO
	INDICATES DROPPED BEAM MEMBER
	INDICATES BEAM BEARING W/ HANGER -TYP

THIRD FLOOR FRAMING PLAN

SCALE 1/4"=1'-0"

NOTES:

1. SEE SHEET S-1.0 FOR GENERAL STRUCTURAL NOTES
2. ALL WOOD COLUMNS IN 2x6 WALLS SHALL BE 3-2x6 AND IN 2x4 WALLS SHALL BE 3-2x4 UNLESS NOTED OTHERWISE ON PLANS
3. ALL BEAMS ARE FLUSH, UNO
4. ALL HEADERS IN INTERIOR 2x BEARING WALLS ARE 2-2x6, UNO
5. ALL HEADERS IN EXTERIOR 2x BEARING WALLS ARE 3-2x6, UNO
6. FLOOR SHEATHING TO BE 3/4" T+G, SEE GENERAL NOTES FOR ADDITIONAL INFORMATION -TYP

STATE OF MAINE
AARON C. JONES
No. 10968
LICENSED
PROFESSIONAL ENGINEER
03/01/18

Reviewed for Code Compliance
Inspections Division
Approved with Conditions
Date: 05/02/18

Structural Integrity
Consulting Engineers, Inc.
46 Forest Avenue
Portland, ME 04101
p. 207-774-4614
f. 866-718-7835
www.structuralintegr.com

BUILD WITH CONFIDENCE
©2018 Structural Integrity Consulting Engineers, Inc.

SI# 17-0229

Rachel Conly Design LLC
26 Sterling Street
Peaks Island, Maine 04108
207.766.5625
www.rachelconlydesign.com

DATE	NOTES
2017.03.01	ISSUED FOR PERMIT

Renovations to
123 Cumberland Ave.
Portland, ME

THIRD FLOOR FRAMING PLAN

S1.4

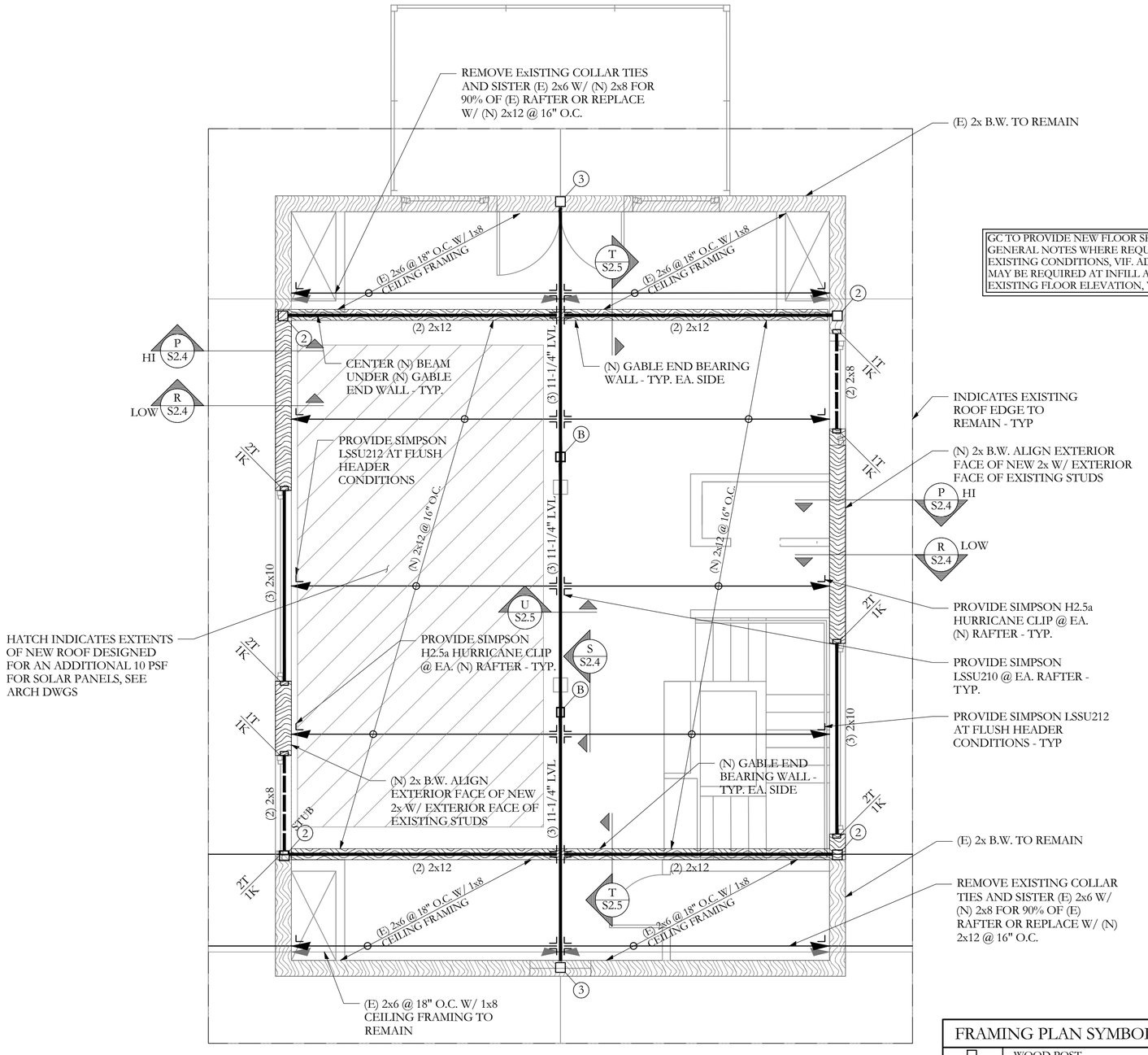

GC TO PROVIDE NEW FLOOR SHEATHING PER GENERAL NOTES WHERE REQUIRED BASED ON EXISTING CONDITIONS, VIF. ADD'L SHEATHING MAY BE REQUIRED AT INFILL AREAS TO MATCH EXISTING FLOOR ELEVATION, VIF

ROOF FRAMING PLAN

NOTES: SCALE 1/4"=1'-0"

1. SEE S1.0 FOR GENERAL STRUCTURAL NOTES.
2. FLOOR SHEATHING TO BE 3/4" -SEE GENERAL NOTES FOR ADDITIONAL INFORMATION.
3. WALL SHEATHING TO BE 1/2" -SEE GENERAL NOTES FOR ADDITIONAL INFORMATION.
4. ROOF SHEATHING TO BE 5/8" -SEE GENERAL NOTES FOR ADDITIONAL INFORMATION.
5. ALL WOOD COLUMNS IN 2x6 WALLS SHALL BE (3) 2x6 AND IN 2x4 WALLS SHALL BE (3) 2x4, UNO.
6. ALL WOOD BEAMS ARE FLUSH, UNO.
7. ALL HEADERS ARE (2) 2x6, UNO W/ 1 TRIM & 1 KING STUD EA. SIDE

FRAMING PLAN SYMBOLS KEY	
□	WOOD POST
■	STEEL COLUMN
(X)	NUMBER OF WOOD STUDS IN POST BELOW
A	COLUMN OR POST ABOVE THIS LEVEL.
B	COLUMN OR POST BELOW THIS LEVEL.
C	COLUMN OR POST CONT. THROUGH THIS LEVEL.
	JOIST BEARING
	CONTINUOUS JOIST WITH INTERMEDIATE BEARING
	FLUSH FRAMED JOIST BEARING WITH HANGER
	WOOD STUD BEARING WALL BELOW
	WOOD STUD SHEAR WALL BELOW
	WOOD STUD BEARING WALL ABOVE
	HATCHING INDICATES OVER FRAMING BY OTHERS -TYP
"X"T	NUMBER OF TRIM STUDS UNDER HEADER
"X"K	NUMBER OF KING STUDS ADJACENT TO HEADER
	INDICATES FLUSH TOP BEAM MEMBER UNO
	INDICATES DROPPED BEAM MEMBER
	INDICATES BEAM BEARING W/ HANGER -TYP

STATE OF MAINE
AARON C. JONES
No. 10968
LICENSED
PROFESSIONAL ENGINEER
03/01/18

Reviewed for Code Compliance
Inspections Division
Approved with Conditions
Date: 05/02/18

Structural Integrity
Consulting Engineers, Inc.
46 Forest Avenue
Portland, ME, 04101
p. 207-774-4614
f. 866-718-7835
www.structuralintegr.com

BUILD WITH CONFIDENCE
©2018 Structural Integrity Consulting Engineers, Inc.

SI# 17-0229

Rachel Conly Design LLC
26 Sterling Street
Peaks Island, Maine 04108
207.766.5625
www.rachelconlydesign.com

DATE	NOTES
2017.03.01	ISSUED FOR PERMIT

Renovations to
123 Cumberland Ave.
Portland, ME

ROOF FRAMING PLAN

S1.5

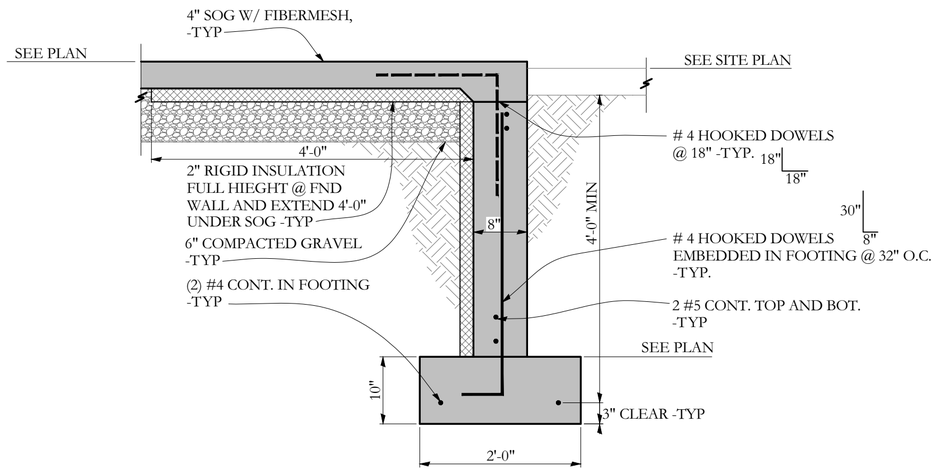

SECTION C S-2.1 3/4"=1'-0

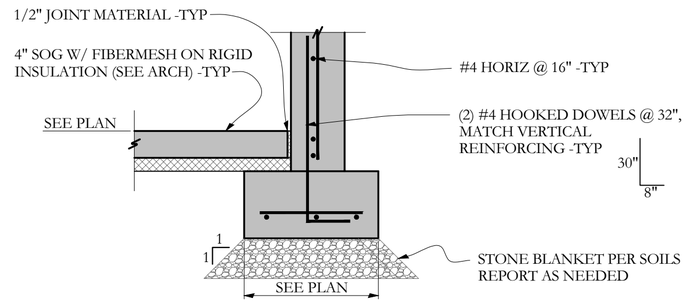

SECTION D S-2.1 3/4"=1'-0

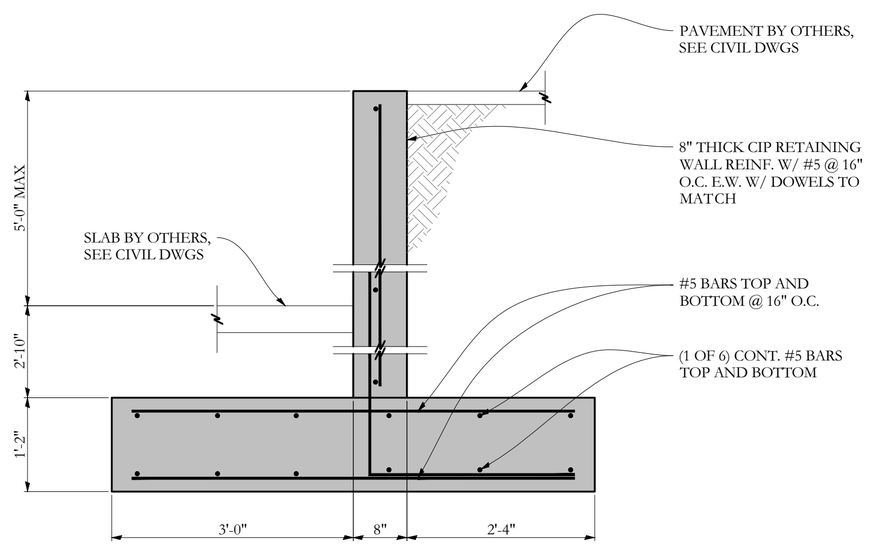

SECTION A S-2.1 3/4"=1'-0

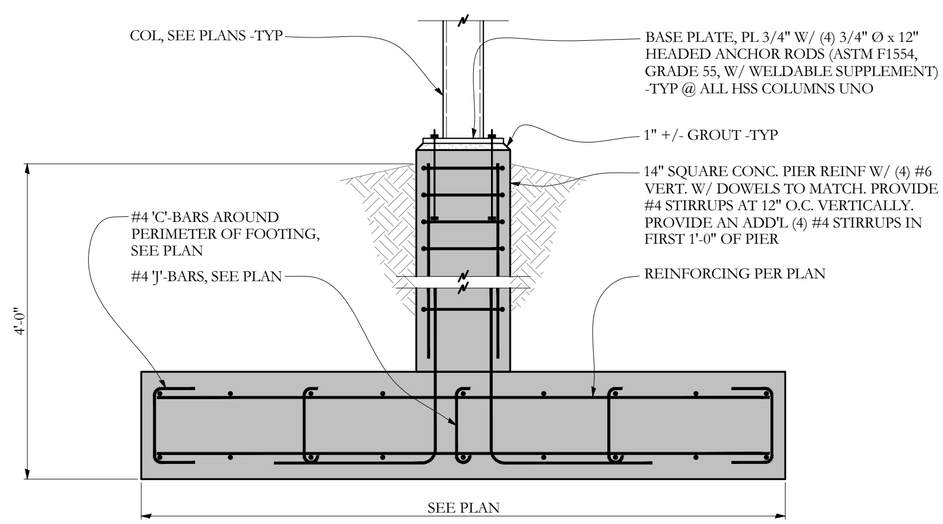

SECTION B S-2.1 3/4"=1'-0

STATE OF MAINE
AARON C. JONES
No. 10968
LICENSED
PROFESSIONAL ENGINEER
03/01/18

Reviewed for Code Compliance
Inspections Division
Approved with Conditions
Date: 05/02/18

Structural Integrity
Consulting Engineers, Inc.
46 Forest Avenue
Portland, ME, 04101
p. 207-774-4614
f. 866-713-7835
www.structuralintegr.com

BUILD WITH CONFIDENCE
©2018 Structural Integrity Consulting Engineers, Inc.

SI# 17-0229

Rachel Conly Design LLC
26 Sterling Street
Peaks Island, Maine 04108
207.766.5625
www.rachelconlydesign.com

DATE	NOTES
2017.03.01	ISSUED FOR PERMIT

Renovations to
123 Cumberland Ave.
Portland, ME

SECTIONS

S2.1

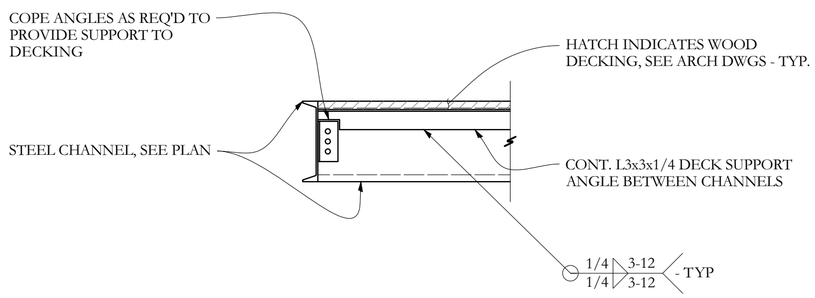

SECTION G S-2.2 3/4"=1'-0

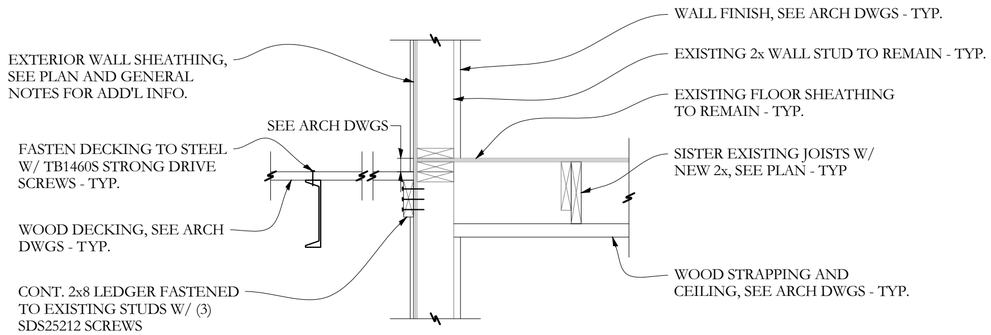

SECTION H S-2.2 3/4"=1'-0

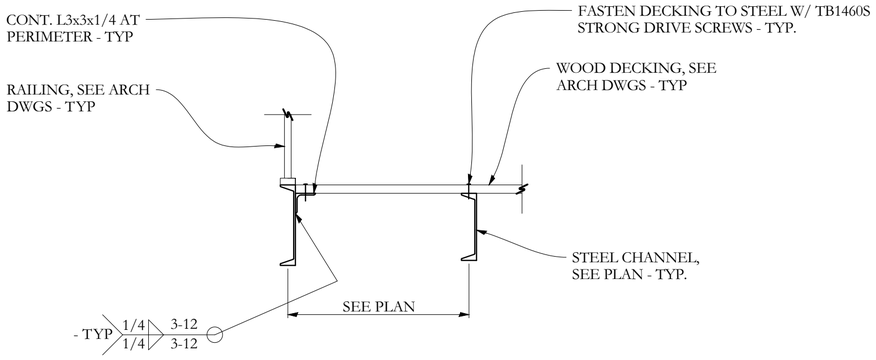

SECTION E S-2.2 3/4"=1'-0

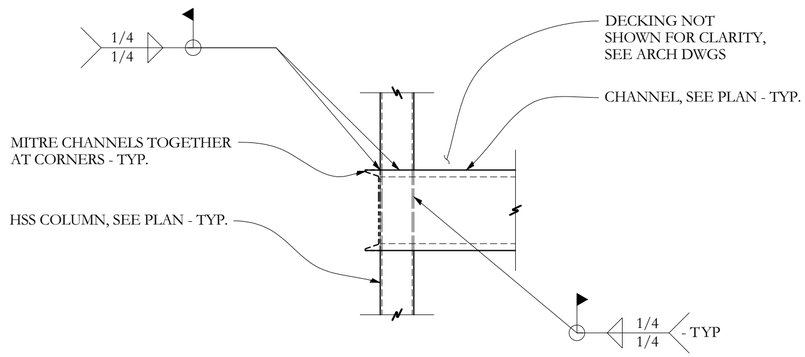

SECTION F S-2.2 3/4"=1'-0

STATE OF MAINE
AARON C. JONES
No. 10968
LICENSED
PROFESSIONAL ENGINEER
03/01/18

Reviewed for Code Compliance
Inspections Division
Approved with Conditions
Date: 05/02/18

Structural Integrity
Consulting Engineers, Inc.
46 Forest Avenue
Portland, ME, 04101
p. 207-774-4614
f. 866-718-7835
www.structuralintegr.com

BUILD WITH CONFIDENCE
©2018 Structural Integrity Consulting Engineers, Inc.

SI# 17-0229

Rachel Conly Design LLC
26 Sterling Street
Peaks Island, Maine 04108
207.766.5625
www.rachelconlydesign.com

DATE	NOTES
2017.03.01	ISSUED FOR PERMIT

Renovations to
123 Cumberland Ave.
Portland, ME

SECTIONS

S2.2

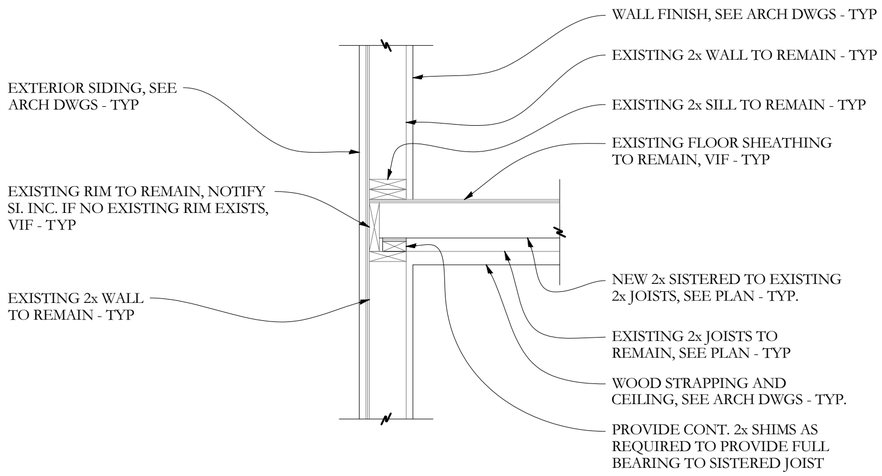

SECTION L/S-2.3 3/4"=1'-0

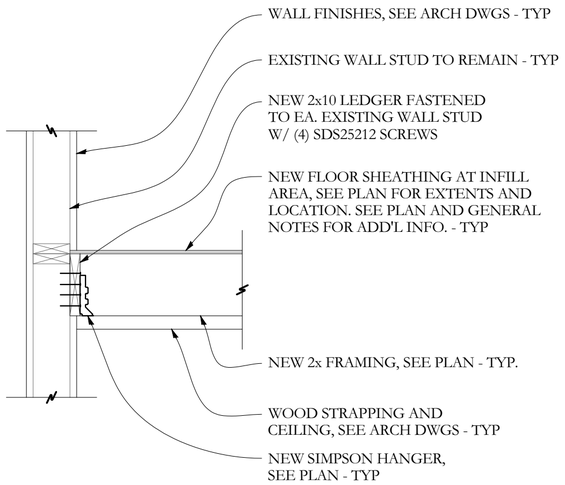

SECTION M/S-2.3 3/4"=1'-0

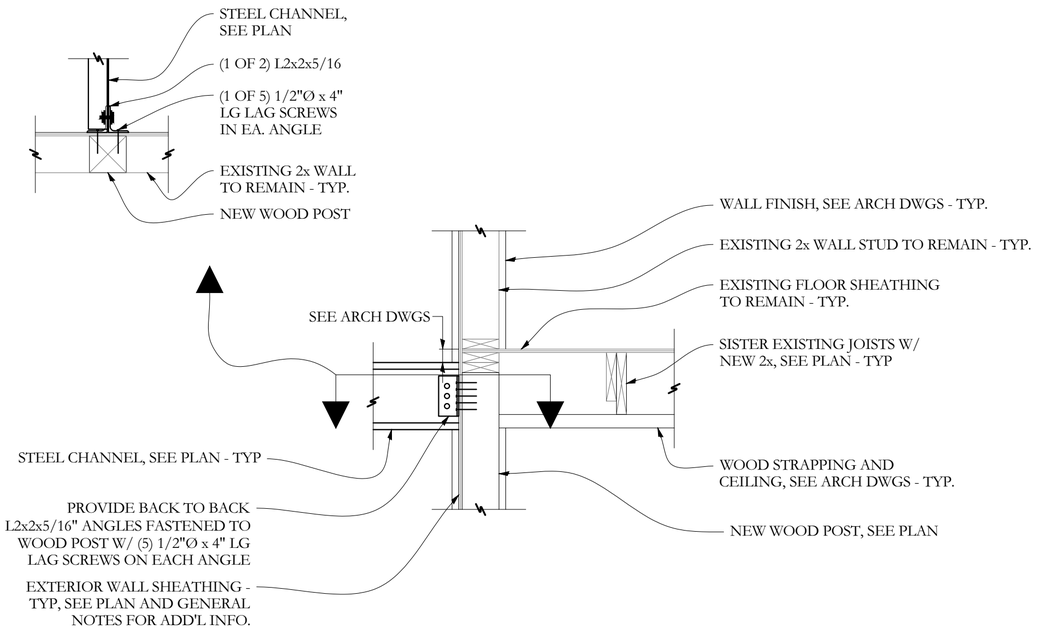

SECTION J/S-2.3 3/4"=1'-0

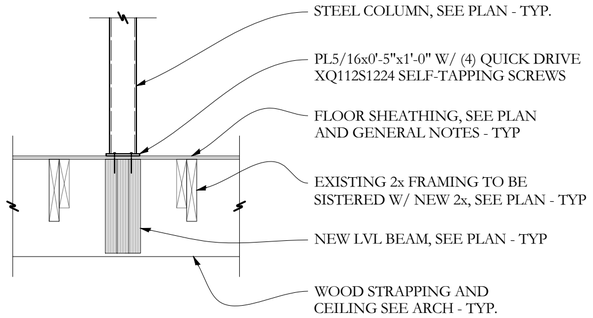

SECTION K/S-2.3 3/4"=1'-0

STATE OF MAINE
AARON C. JONES
No. 10968
LICENSED
PROFESSIONAL ENGINEER
03/01/18

Reviewed for Code Compliance
Inspections Division
Approved with Conditions
Date: 05/02/18

Structural Integrity
Consulting Engineers, Inc.
46 Forest Avenue
Portland, ME 04101
p. 207-774-4614
f. 866-718-7835
www.structuralintegr.com

BUILD WITH CONFIDENCE
©2018 Structural Integrity Consulting Engineers, Inc.

SI# 17-0229

Rachel Conly Design LLC
26 Sterling Street
Peaks Island, Maine 04108
207.766.5625
www.rachelconlydesign.com

DATE	NOTES
2017.03.01	ISSUED FOR PERMIT

Renovations to
123 Cumberland Ave.
Portland, ME

SECTIONS

S2.3

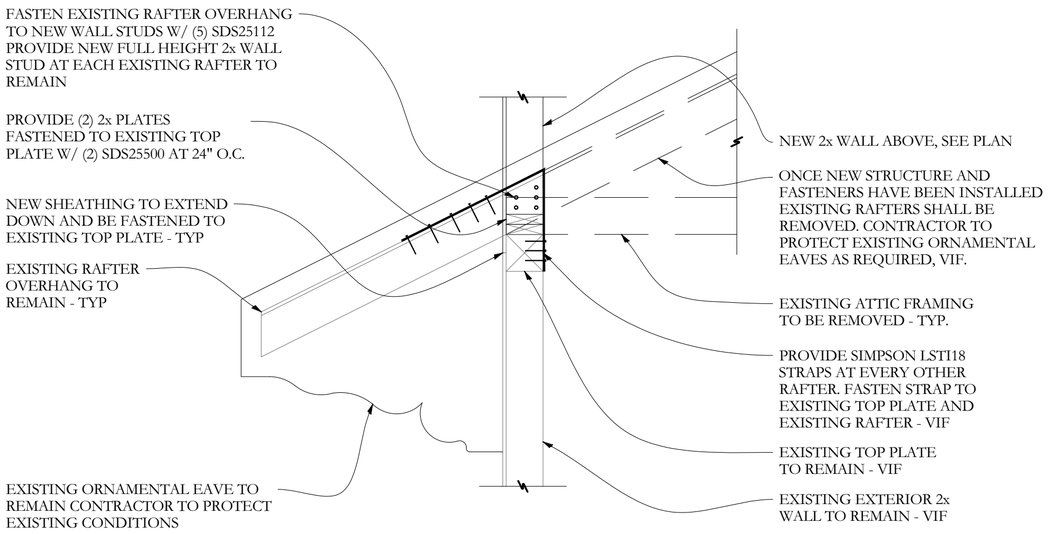

SECTION R/S-2.4 3/4"=1'-0

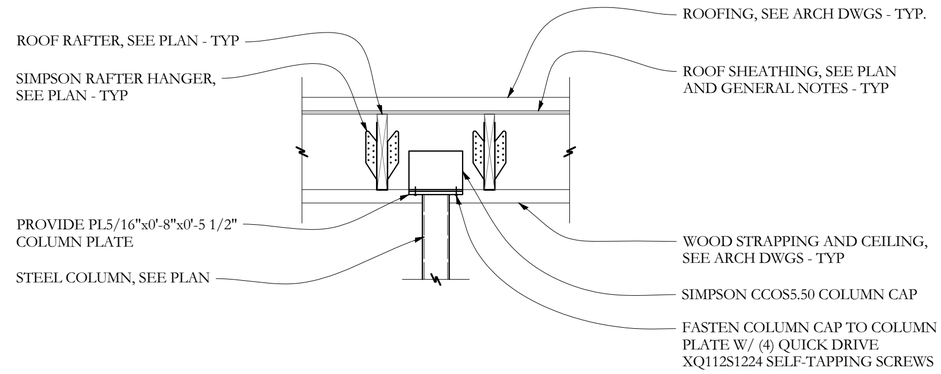

SECTION S/S-2.4 3/4"=1'-0

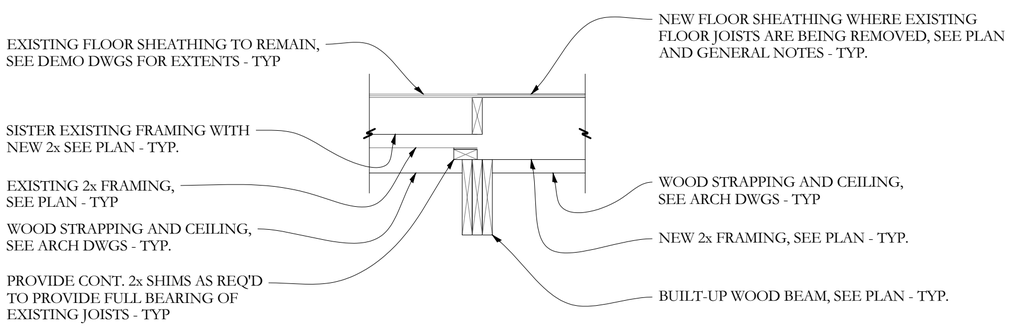

SECTION N/S-2.4 3/4"=1'-0

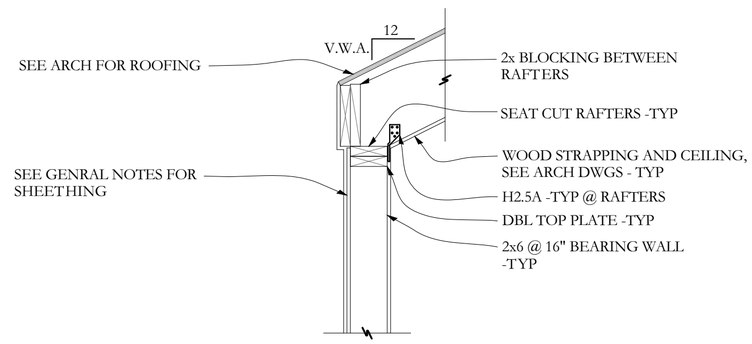

SECTION P/S-2.4 3/4"=1'-0

STATE OF MAINE
AARON C. JONES
No. 10968
LICENSED
PROFESSIONAL ENGINEER
03/01/18

Reviewed for Code Compliance
Inspections Division
Approved with Conditions
Date: 05/02/18

Structural Integrity
Consulting Engineers, Inc.
46 Forest Avenue
Portland, ME, 04101
p. 207-774-4614
f. 866-713-7835
www.structuralintegr.com

BUILD WITH CONFIDENCE
©2018 Structural Integrity Consulting Engineers, Inc.

SI# 17-0229

Rachel Conly Design LLC
26 Sterling Street
Peaks Island, Maine 04108
207.766.5625
www.rachelconlydesign.com

DATE	NOTES
2017.03.01	ISSUED FOR PERMIT

Renovations to
123 Cumberland Ave.
Portland, ME

SECTIONS

S2.4

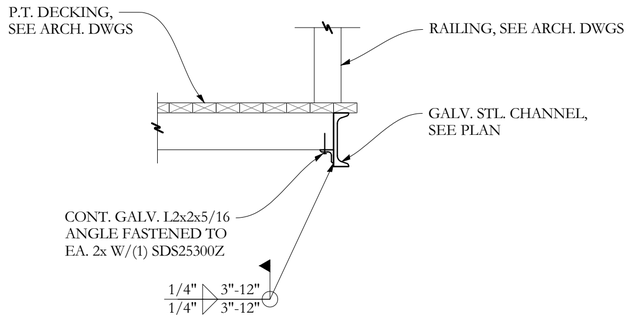

SECTION V/S-2.5 3/4"=1'-0

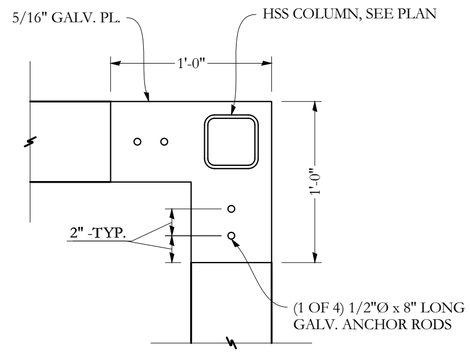

SECTION W/S-2.5 1 1/2"=1'-0

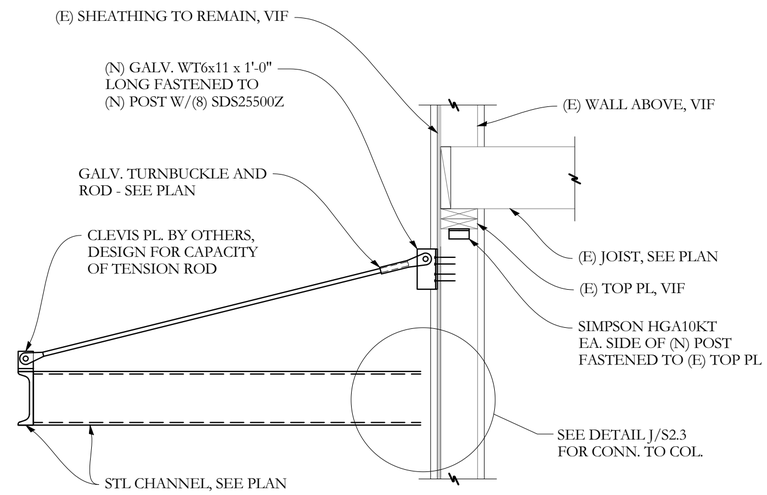

SECTION Y/S-2.5 3/4"=1'-0

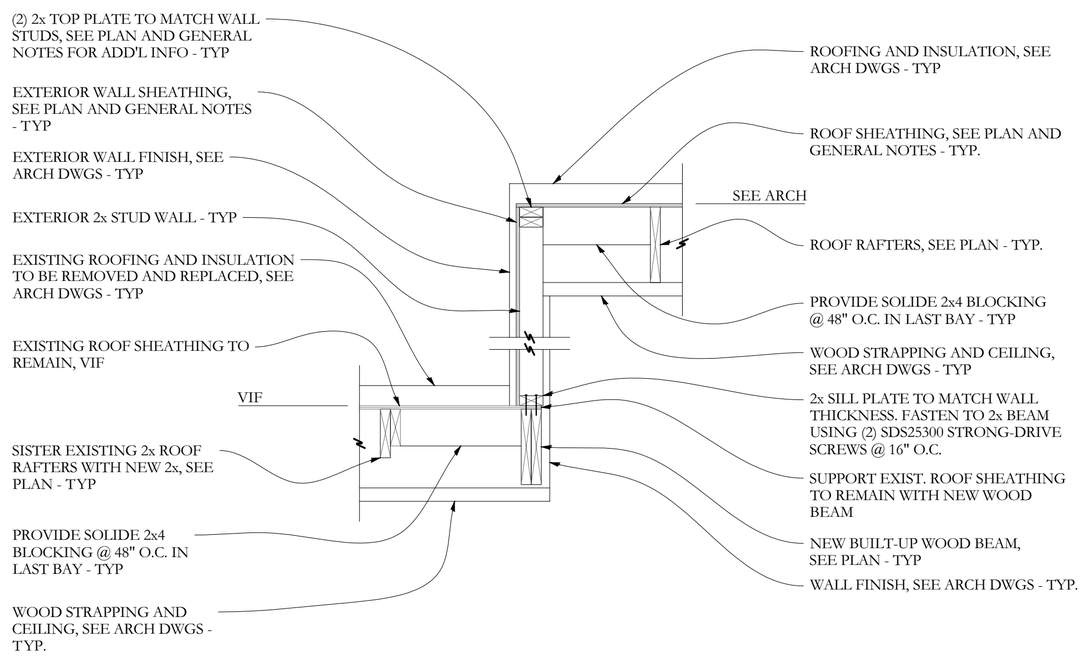

SECTION T/S-2.5 3/4"=1'-0

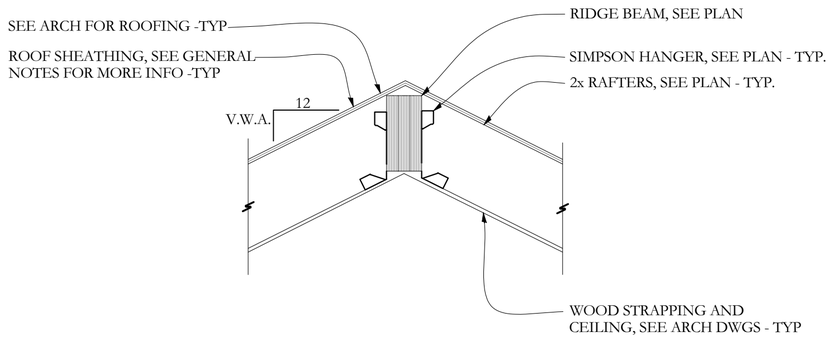

SECTION U/S-2.5 3/4"=1'-0

STATE OF MAINE
AARON C. JONES
No. 10968
LICENSED
PROFESSIONAL ENGINEER
03/01/18

Reviewed for Code Compliance
Inspections Division
Approved with Conditions
Date: 05/02/18

Structural Integrity
Consulting Engineers, Inc.
46 Forest Avenue
Portland, ME, 04101
p. 207-774-4614
f. 866-713-7835
www.structuralintegr.com

BUILD WITH CONFIDENCE
©2018 Structural Integrity Consulting Engineers, Inc.

SI# 17-0229

Rachel Conly Design LLC
26 Sterling Street
Peaks Island, Maine 04108
207.766.5625
www.rachelconlydesign.com

DATE	NOTES
2017.03.01	ISSUED FOR PERMIT

Renovations to
123 Cumberland Ave.
Portland, ME

SECTIONS

S2.5