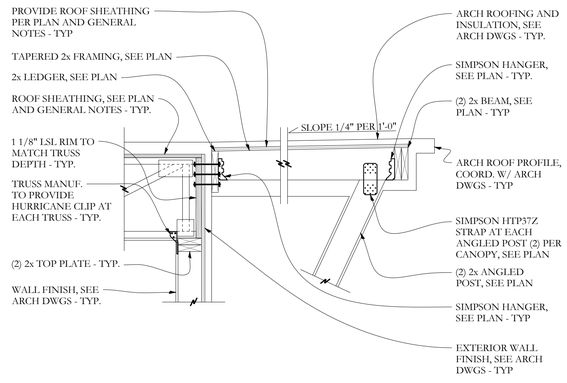

SECTION J/S-3.2 3/4"=1'-0

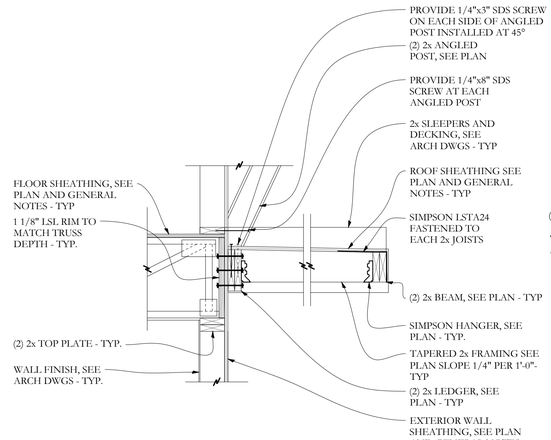

SECTION K/S-3.2 3/4"=1'-0

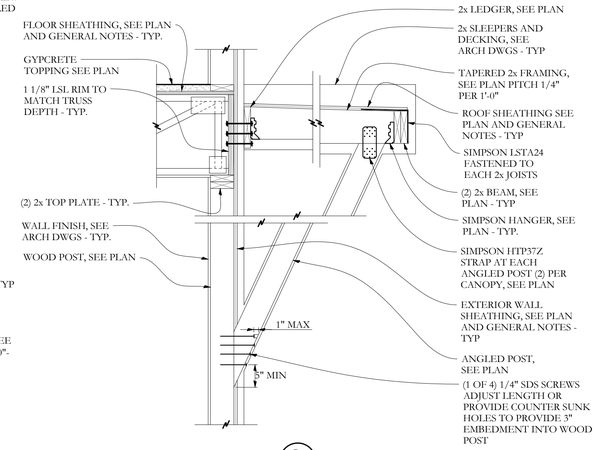

SECTION L/S-3.2 3/4"=1'-0

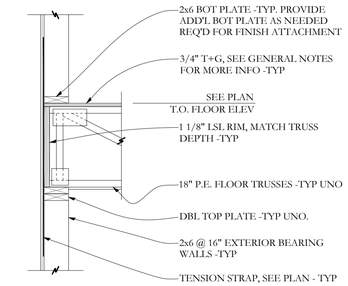

SECTION M/S-3.2 3/4"=1'-0

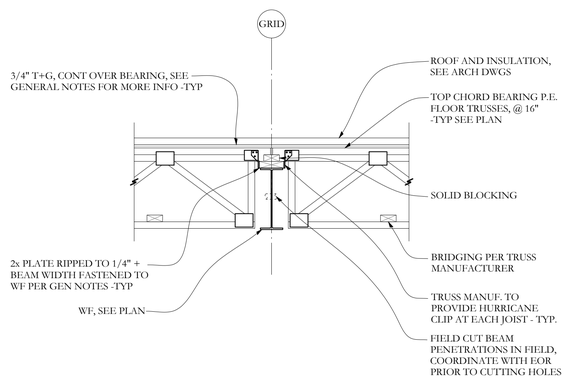

SECTION E/S-3.2 3/4"=1'-0

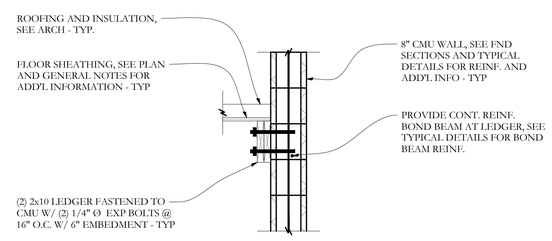

SECTION F/S-3.2 3/4"=1'-0

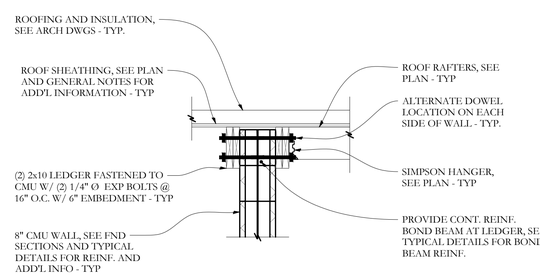

SECTION G/S-3.2 3/4"=1'-0

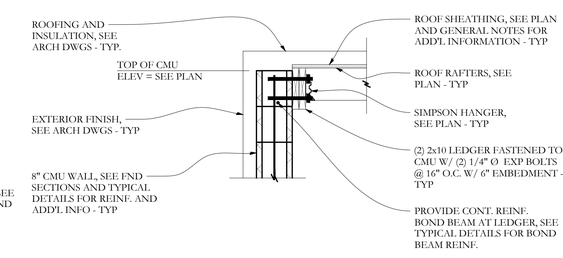

SECTION H/S-3.2 3/4"=1'-0

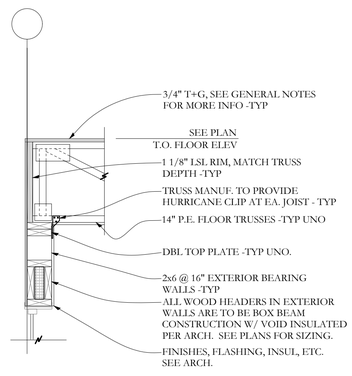

SECTION A/S-3.2 3/4"=1'-0

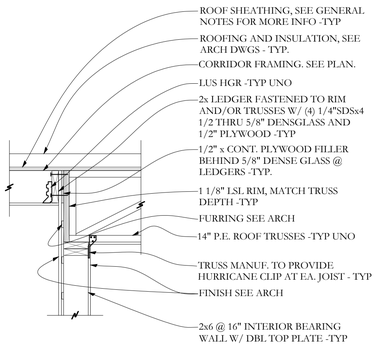

SECTION B/S-3.2 3/4"=1'-0

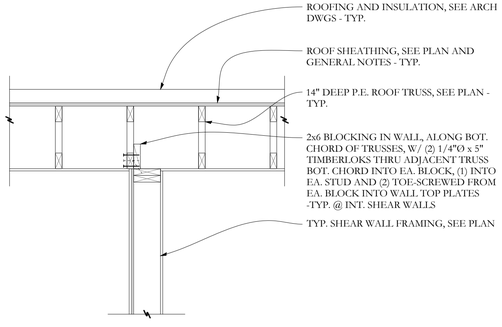

SHEAR WALL CONNECTION TO ROOF TRUSSES

SECTION C/S-3.2 3/4"=1'-0

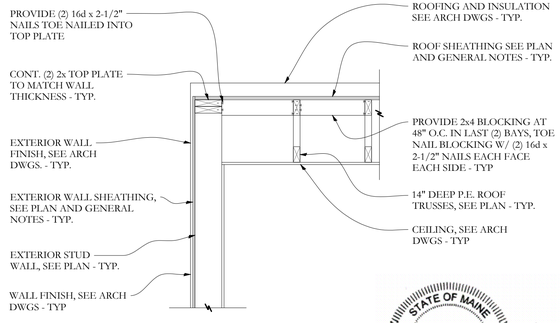

SECTION D/S-3.2 3/4"=1'-0

STATE OF MAINE
AARON C. JONES
No. 10968
LICENSED
PROFESSIONAL ENGINEER
01/16/18

© 2017 RYAN SENATORE ARCHITECTURE

RESIDENCES
155 SHERIDAN STREET
PORTLAND, MAINE

RSA
RYAN SENATORE
ARCHITECTURE
565 CONGRESS STREET
PORTLAND, MAINE 04101
207-650-6414
senatorearchitecture.com

CONSULTANTS:

Structural Integrity
Structural Engineers, LLC
82 Forest Avenue
Portland, ME 04101
p. 207.78.4.6.6
f. 866.295.9.0.5
www.structuralintegrity.com
DUELL/SETH CONFERENCE:
SI#17-0159

REVISIONS:

DATE:	1/16/2018
PROJECT No.	17-0159
DRAWN BY:	CJO
CHECKED BY:	CJO
SCALE:	AS NOTED

SHEET TITLE:

DETAILS

S-3.2