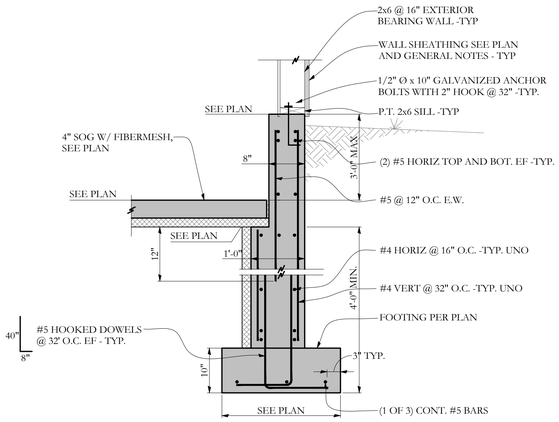

SECTION J/S-2.1 3/4"=1'-0

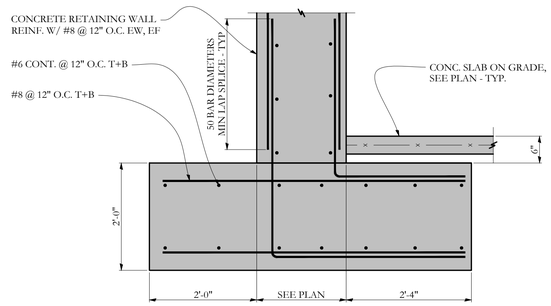

SECTION K/S-2.1 3/4"=1'-0

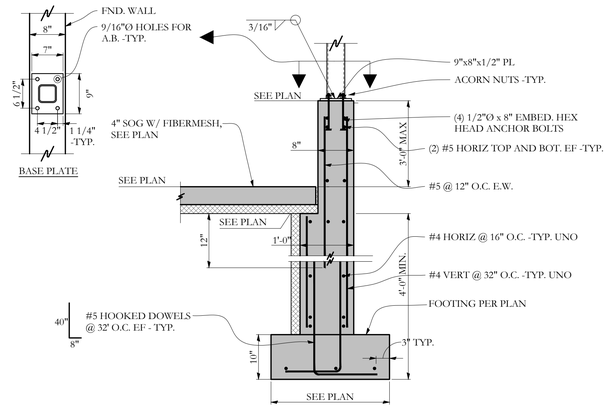

SECTION L/S-2.1 3/4"=1'-0

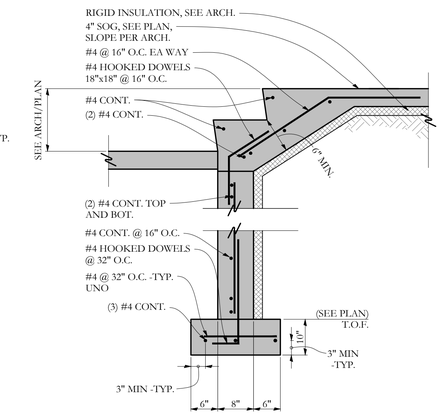

SECTION M/S-2.1 3/4"=1'-0

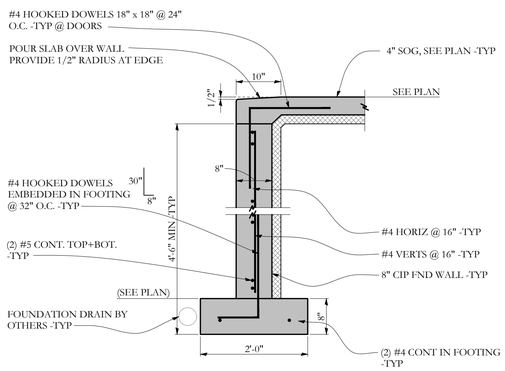

SECTION E/S-2.1 3/4"=1'-0

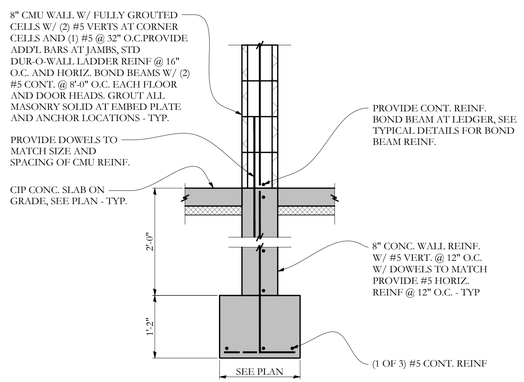

SECTION F/S-2.1 3/4"=1'-0

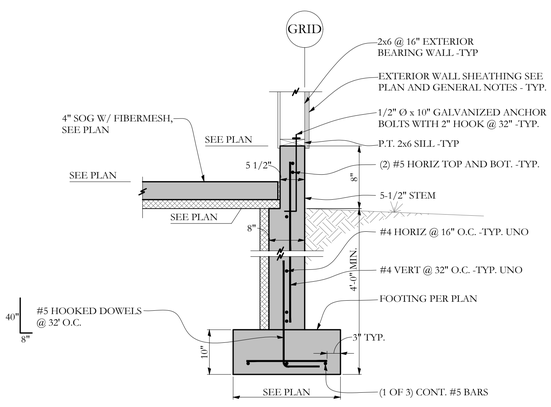

SECTION A/S-2.1 3/4"=1'-0

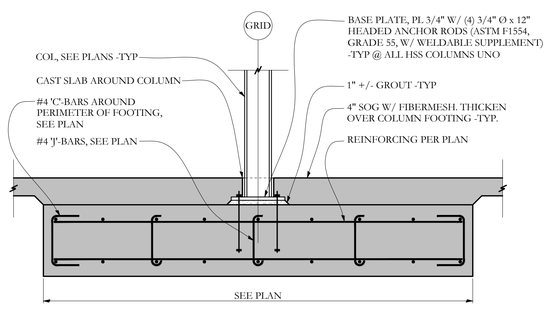

SECTION B/S-2.1 3/4"=1'-0

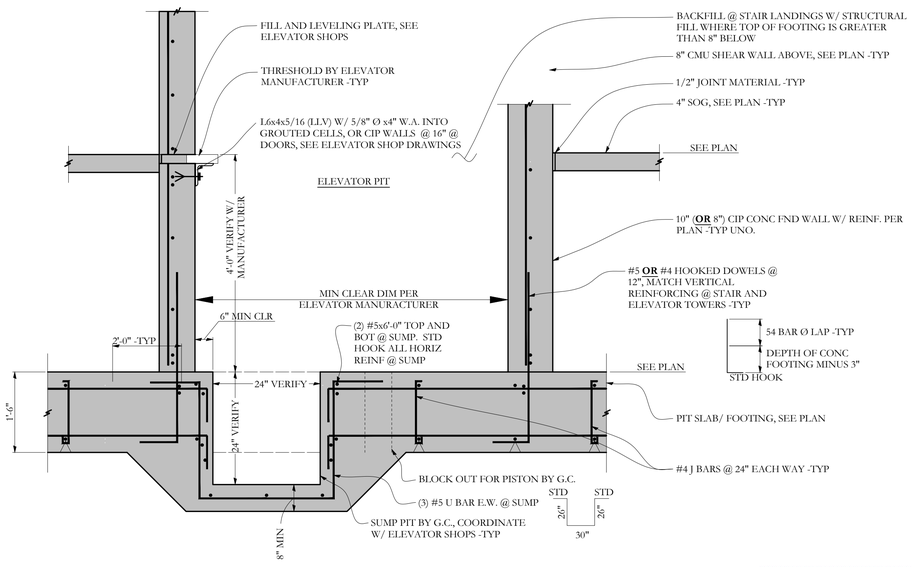

SECTION C/S-2.1 3/4"=1'-0

STATE OF MAINE
AARON C. JONES
No. 10968
LICENSED
PROFESSIONAL ENGINEER
01/16/18

© 2017 RYAN SENATORE ARCHITECTURE

RESIDENCES
155 SHERIDAN STREET
PORTLAND, MAINE

RSA
RYAN SENATORE
ARCHITECTURE
565 CONGRESS STREET
PORTLAND, MAINE 04101
207-650-6414
senatorearchitecture.com

CONSULTANTS:

Structural Integrity
Structural Engineers, Inc.
82 Travis Avenue
Portland, ME 04103
p. 207.78.4.6.6
f. 866.705.9.2.8
www.structuralintegrity.com
FILE/REFERENCE: S:\#17-0159\Structural\Cad\Structural\ SI#17-0159

REVISIONS:

DATE:	1/16/2018
PROJECT No.	17-0159
DRAWN BY:	CJO
CHECKED BY:	CJO
SCALE:	AS NOTED

SHEET TITLE:

DETAILS

S-2.1