Stair Nosings:
1. maximum radius of nosing to be ½"
2. incline of riser to be maximum 30 degrees inclined from vertical

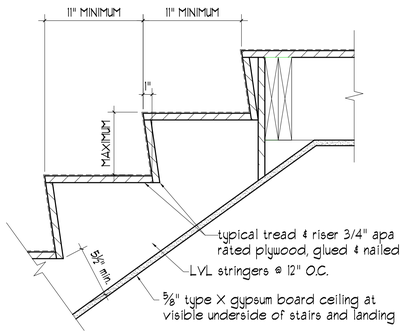

C Stair Tread Plan Detaill
1½" = 1'-0"

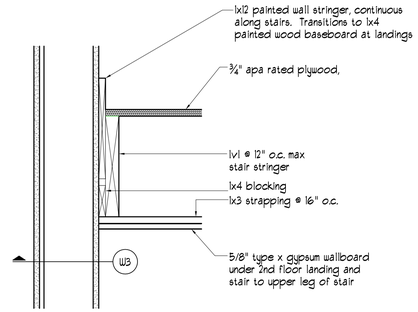

B Stair Handrail Plan Detaill
1½" = 1'-0"

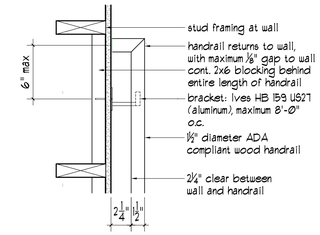

A Stair Handrail Plan Detaill
1½" = 1'-0"

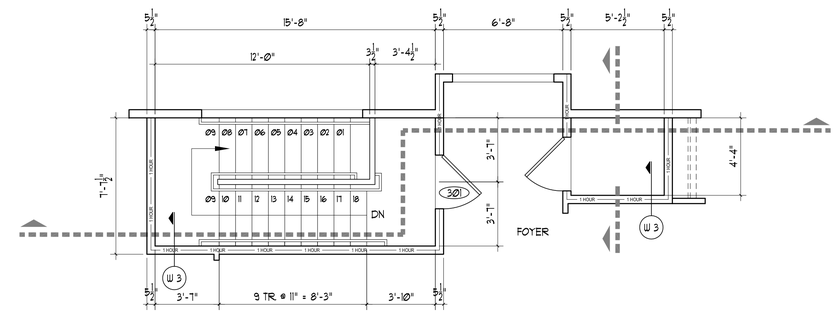

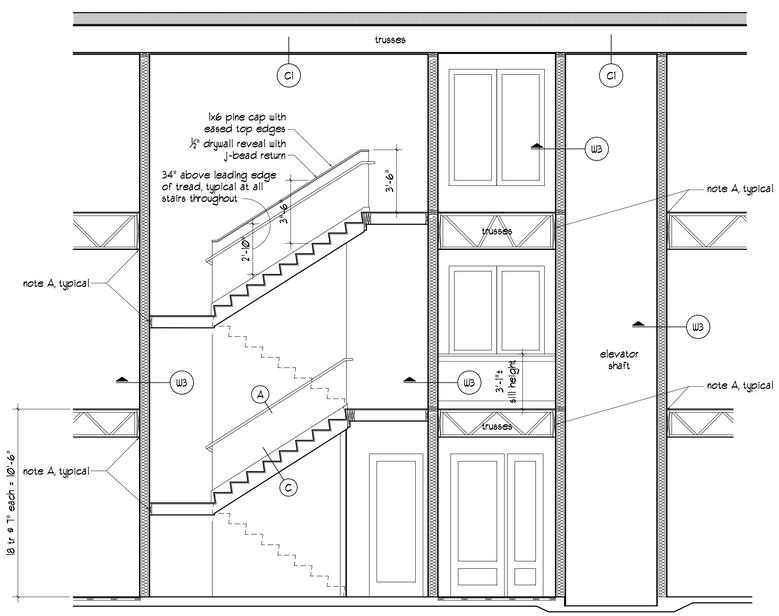

Note A:
gypsum board contiuous in back of ledger. use exterior grade gypsum wall board in bac of ledger

3 Stair #1 Cross Section
1/4"= 1'-0"

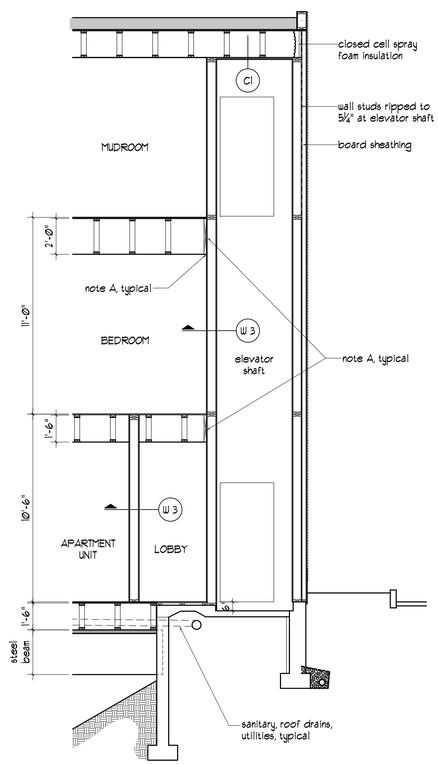

2 elevator shaft
1/4"= 1'-0"

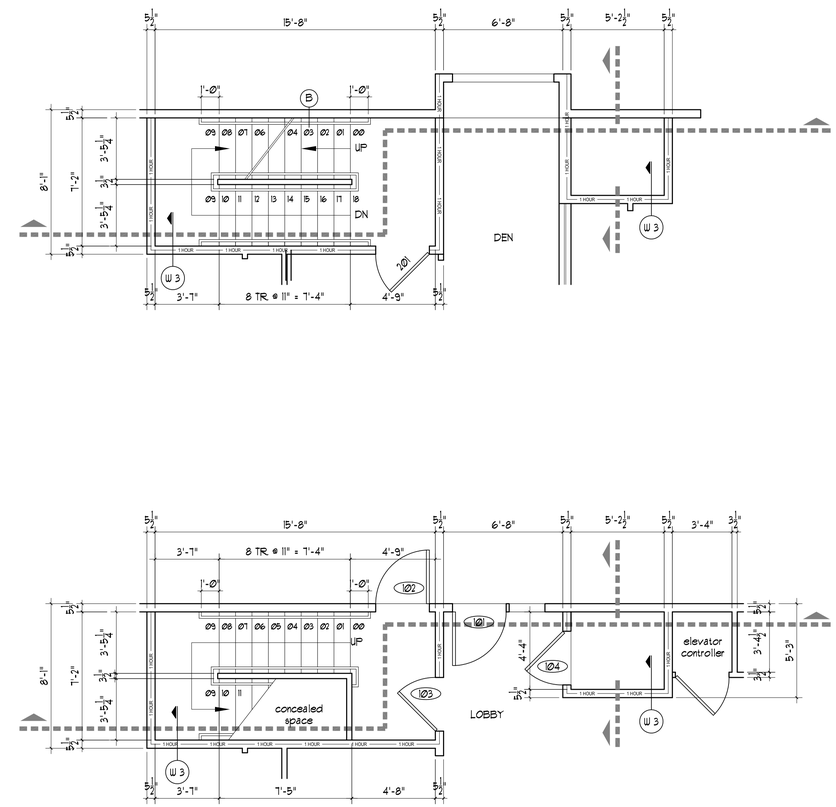

1 Stair #1 Plan
1/4"= 1'-0"

LICENSED ARCHITECT DAVID LLOYD NO. 936 STATE OF MAINE

Prepared For:
New Day Farm LLC
Gorham Maine

Consultant:

Architect:
ARCHETYPE architects
48 Union Wharf Portland, Maine 04101
(207) 772-6022 Fax (207) 772-4056

Project:
Sheridan Street Townhouses
152 Sheridan Street
Portland Maine 04101

Revisions:

Scale: 1/4" = 1'-0"

Date: March 10, 2014

STAIRS

a3.4