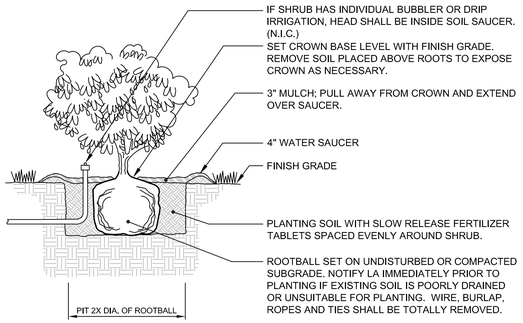

(A) SHRUB INSTALLATION DETAIL

N.T.S.

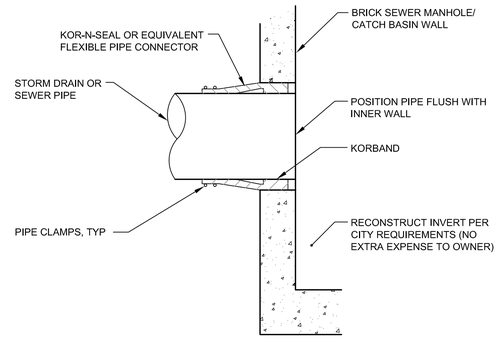

(D) PIPE CONNECTION TO EXISTING STRUCTURE DETAIL

N.T.S.

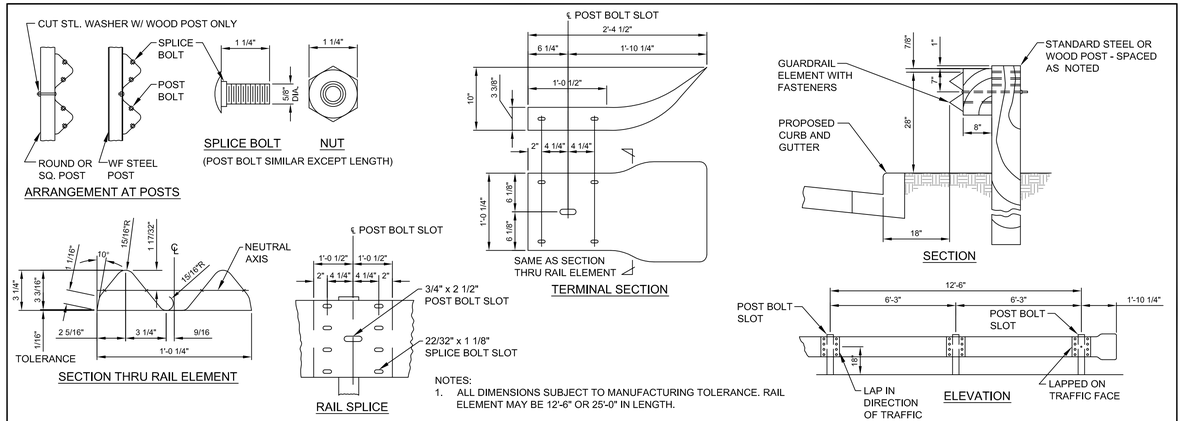

NOTES:

1. ALL DIMENSIONS SUBJECT TO MANUFACTURING TOLERANCE. RAIL ELEMENT MAY BE 12'-6" OR 25'-0" IN LENGTH.
2. CONTRACTOR SHALL FURNISH AND INSTALL GUIDERAIL, POSTS, FASTENERS, AND ALL NECESSARY PARTS REQUIRED TO COMPLETE THE INSTALLATION.

(G) STANDARD METAL GUIDERAIL DETAIL

N.T.S.

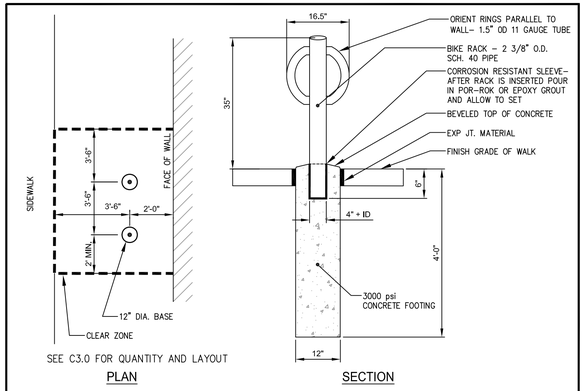

MFR: DERO BIKE RACKS
IN–GROUND MOUNT,
POWDER COAT FINISH
COLOR: BLACK
www.dero.com
1–800–298–4915

(B) BIKE HITCH MOUNTING DETAIL

N.T.S.

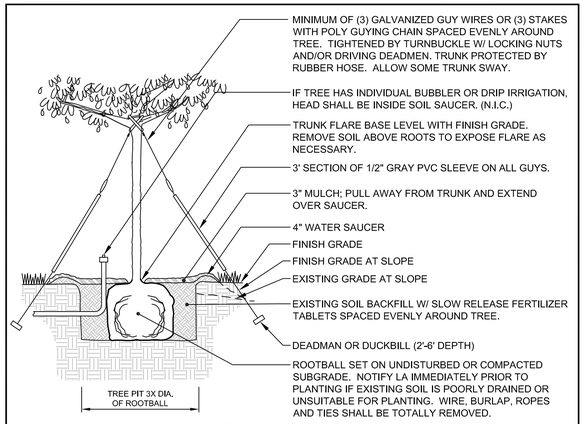

(E) TREE INSTALLATION DETAIL: >10' HT.

N.T.S.

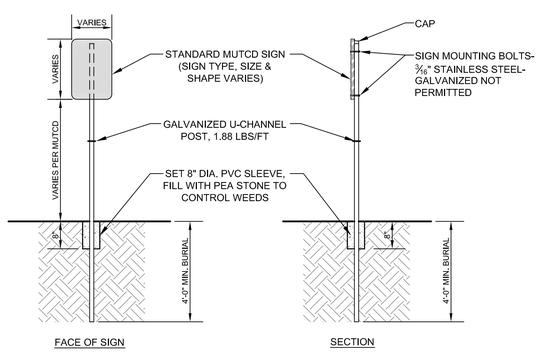

(C) TRAFFIC SIGN

N.T.S.

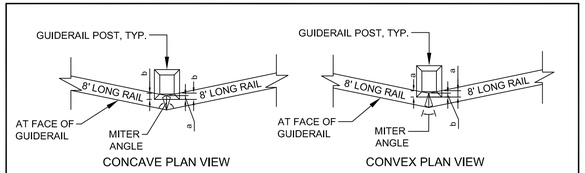

RADIUS (FEET)	MITER ANGLE (DEGREES)	a (INCHES)	b (INCHES)
10.00	47.16	1/2"	2 1/4"
20.00	23.07	1/2"	1 1/4"
30.00	15.32	1/2"	1 1/8"
40.00	11.48	1/2"	7/8"
50.00	9.18	1/2"	7/8"
75.00	6.11	1/2"	3/4"
100.00	4.58	1/2"	5/8"
125.00	3.67	1/2"	5/8"
150.00	3.06	1/2"	5/8"
>150.00	0.00	1/2"	1/2"

(F) SPECIAL POST & RAIL END TREATMENT FOR RADIAL GUIDERAIL

N.T.S.

Prepared For:	Project:	Revisions:
NEW DAY FARM, LLC	SHERIDAN STREET TOWNHOUSES	03.03.14 - RELEASED FOR BIDDING 01.21.14 - REVISED FOR STAFF COMMENTS AND RESUBMITTED
11 MCQUILLIANS HILL DRIVE GORHAM, ME 04038	152 SHERIDAN STREET PORTLAND, MAINE	01.10.14 - REVISED FOR FINAL PLAN SUBMISSION 01.06.14 - FINAL PLAN SUBMISSION

Architect: ARCHETYPE architects
48 Union Wharf Portland, Maine 04101
(207) 772-6022 Fax (207) 772-4056

STATE OF MAINE — STEPHEN R. BUSHEY — LICENSED PROFESSIONAL ENGINEER — 3/13/14

Date: OCT. 2013
Scale: N.T.S.

DETAILS

C-5.1

ENGINEERS FST Since 1954
FAY, SPOFFORD & THORNDIKE, INC.
ENGINEERS · PLANNERS · SCIENTISTS
5 BURLINGTON WOODS, BURLINGTON, MA 01803

R:\3041 Sheridan Street Portland\Cadd\Permit Set\dwg\3041-DET.dwg winter_c 3/3/2014 11:07 AM