FACP Battery Calculation

5/10/2017

PROJECT NAME: 123 WASHINGTON AVENUE
Required Standby Time: 24 Hours
Required Alarm Time: 5 Minutes

Regulated Load in Standby

Device Type	Number of Devices		Current (Amps)		Total Current (Amps)
FACP – MS-9200UDLS MAIN CIRCUIT BOARD	1	X	0.14500	=	0.14500
XRM-24B	1	X	0.00000	=	0.00000
ANN-80 REMOTE ANNUNCIATOR	1	X	0.01500	=	0.01500
SD355 SMOKE DETECTOR	1	X	0.00030	=	0.00030
MMF-301 MONITOR MODULE	3	X	0.00040	=	0.00120
BG-12LX PULL STATION	8	X	0.00030	=	0.00240
TOTAL STANDBY LOAD					0.16390

Regulated Load in ALARM

Device Type	Number of Devices		Current (Amps)		Total Current (Amps)
FACP – MS-9200UDLS MAIN CIRCUIT BOARD	1	X	0.27500	=	0.27500
XRM-24B	1	X	0.00000	=	0.00000
ANN-80 REMOTE ANNUNCIATOR	1	X	0.04000	=	0.04000
MAX ALARM DRAW – ALL ADDRESS DEVICES	1	X	0.40000	=	0.40000
NAC-1 (See Voltage Drop Calculations)	1	X	1.37500	=	1.37500
NAC-2 (See Voltage Drop Calculations)	1	X	1.17400	=	1.17400
NAC-3 (See Voltage Drop Calculations)	1	X	0.98600	=	0.98600
NAC-4 (See Voltage Drop Calculations) SPARE		X	0.00000	=	0.00000
TOTAL ALARM LOAD					4.25000

Battery Requirements

Standby Load			Required Standby Time in Hours		
Current (Amps)	0.16390	X	24.00000	=	3.93360
Alarm Load			Required Alarm Time in Hours		
Current (Amps)	4.25000	X	0.08333	=	0.35417
Total Ampere Hours (before derating factor)					4.28777
Derating Factor				X	1.2
TOTAL AMPERE HOURS REQUIRED				=	5.14532
BATTERIES TO BE PROVIDED (2 – 12v)					7 AH

Point to Point NAC Voltage Drop Calculation

2/1/2017

Project Name: 123 WASHINGTON AVENUE
Circuit Number: NAC-1

Nominal System Voltage: 20.4 volts
Minimum Device Voltage: 16.0 volts
Distance from source to 1st device: 80 feet
Wire Gauge for balance of circuit: Wire Gauge 14, 14 — Resistance Per 1000 3.07, 3.07

Max Output Current: 2.00 amps
Total Circuit Current: 1.375 amps
End of Line Voltage: 18.51 volts

Circuit is within limits

	Device Current	Distance previous device	Voltage at Device	Drop from source	Percent Drop
Device 1	0.212	80	19.72	0.675	3.31%
Device 2	0.176	65	19.26	1.140	5.59%
Device 3	0.176	50	18.96	1.443	7.07%
Device 4	0.079	44	18.74	1.662	8.15%
Device 5	0.212	5	18.72	1.684	8.26%
Device 6	0.066	17	18.66	1.738	8.52%
Device 7	0.066	18	18.61	1.789	8.77%
Device 8	0.176	28	18.54	1.855	9.09%
Device 9	0.212	28	18.51	1.892	9.27%
Totals	1.375	335			

Notes:
Wire resistance is doubled in the calculations for two wires (Positive and Negative).
The voltage calculated to the last device must not be lower than the manufactures listed minimum operating voltage (IE: rated operating voltage 16–33 VDC (24 VDC nominal)).

Point to Point NAC Voltage Drop Calculation

5/10/2017

Project Name: 123 WASHINGTON AVENUE
Circuit Number: NAC-2

Nominal System Voltage: 20.4 volts
Minimum Device Voltage: 16.0 volts
Distance from source to 1st device: 30 feet
Wire Gauge for balance of circuit: Wire Gauge 14, 14 — Resistance Per 1000 3.07, 3.07

Max Output Current: 2.00 amps
Total Circuit Current: 1.174 amps
End of Line Voltage: 19.44 volts

Circuit is within limits

	Device Current	Distance previous device	Voltage at Device	Drop from source	Percent Drop
Device 1	0.176	30	20.18	0.216	1.06%
Device 2	0.176	30	20.00	0.400	1.96%
Device 3	0.212	15	19.92	0.476	2.33%
Device 4	0.079	75	19.64	0.757	3.71%
Device 5	0.212	15	19.59	0.806	3.95%
Device 6	0.107	30	19.54	0.864	4.24%
Device 7	0.212	75	19.44	0.962	4.72%
Totals	1.174	270			

Notes:
Wire resistance is doubled in the calculations for two wires (Positive and Negative).
The voltage calculated to the last device must not be lower than the manufactures listed minimum operating voltage (IE: rated operating voltage 16–33 VDC (24 VDC nominal)).

Point to Point NAC Voltage Drop Calculation

5/10/2017

Project Name: 123 WASHINGTON AVENUE
Circuit Number: NAC-3

Nominal System Voltage: 20.4 volts
Minimum Device Voltage: 16.0 volts
Distance from source to 1st device: 115 feet
Wire Gauge for balance of circuit: Wire Gauge 14, 14 — Resistance Per 1000 3.07, 3.07

Max Output Current: 2.00 amps
Total Circuit Current: 0.986 amps
End of Line Voltage: 19.26 volts

Circuit is within limits

	Device Current	Distance previous device	Voltage at Device	Drop from source	Percent Drop
Device 1	0.176	115	19.70	0.696	3.41%
Device 2	0.079	20	19.60	0.796	3.90%
Device 3	0.066	14	19.54	0.859	4.21%
Device 4	0.066	9	19.50	0.895	4.39%
Device 5	0.066	20	19.43	0.969	4.75%
Device 6	0.079	6	19.41	0.988	4.85%
Device 7	0.066	6	19.39	1.005	4.93%
Device 8	0.176	25	19.34	1.065	5.22%
Device 9	0.212	57	19.26	1.139	5.58%
Totals	0.986	272			

Notes:
Wire resistance is doubled in the calculations for two wires (Positive and Negative).
The voltage calculated to the last device must not be lower than the manufactures listed minimum operating voltage (IE: rated operating voltage 16–33 VDC (24 VDC nominal)).

GENERAL NOTES:

1. THESE DRAWINGS ARE DIAGRAMMATIC. REFER TO THE ARCHITECTURAL DRAWINGS FOR EXACT DIMENSIONS.
2. INSTALLATION SHALL COMPLY WITH NEC, NFPA 72 AND ALL OTHER APPLICABLE CODES AS REQUIRED BY THE LOCAL AUTHORITY HAVING JURISDICTION.
3. WIRING DEPICTED ON THESE PLANS IS SCHEMATIC – ACTUAL WIRE LOCATIONS MAY DIFFER FROM THESE PLANS. WIRING SHALL BE PERFORMED AS ACTUAL BUILDING CONSTRUCTION CONDITIONS ALLOW AND TO MINIMIZE PENETRATIONS THROUGH AREA SEPARATION WALLS AND FIRE WALLS. THE USE OF A RACEWAY IS PERMITTED AS LONG AS NO 110V OR HIGHER VOLTAGE CABLES ARE IN THE SAME RACEWAY.
4. FIRE RATINGS SHALL BE MAINTAINED FOR ALL PENETRATIONS THROUGH FIRE-RATED CONSTRUCTION.
5. POWER FOR ALL FIRE ALARM PANELS AND FIRE ALARM POWER SUPPLIES MUST BE PROVIDED BY A DEDICATED AC BRANCH CIRCUIT. THE LOCATION OF THE BRANCH CIRCUIT BREAKER SHALL BE PERMANENTLY IDENTIFIED AT THE CONTROL UNIT AND SHALL HAVE A RED MARKING IN ACCORDANCE WITH NFPA 72.
6. POWER-LIMITED AND NONPOWER-LIMITED CIRCUIT WIRING MUST REMAIN SEPARATED IN CABINET. ALL POWER-LIMITED CIRCUIT WIRING MUST REMAIN AT LEAST 0.25" AWAY FROM ANY NONPOWER-LIMITED CIRCUIT WIRING. FURTHERMORE, ALL POWER-LIMITED AND NONPOWER-LIMITED CIRCUIT WIRING MUST ENTER AND EXIT THE CABINET THROUGH DIFFERENT KNOCK OUTS AND/OR SEPARATE CONDUITS.
7. WHEN UTILIZING CLASS "A" CIRCUITS, SEPARATE OUTGOING AND RETURN CONDUCTORS OF CLASS "A" CIRCUITS BY A MINIMUM OF 12" WHERE RUN VERTICALLY AND 48" WHERE RUN HORIZONTALLY.
8. WHEN UTILIZING SHIELDED CABLE TIE SHIELDS THROUGH AND INSULATE AT EACH JUNCTION BOX. INSULATE AND TAPE BACK AT END.
9. ALL FIRE ALARM CABLING SHALL BE ACCEPTABLE TO THE FIRE ALARM EQUIPMENT MANUFACTURER FOR THE INTENDED PURPOSE.
10. SMOKE DETECTORS SHALL NOT BE INSTALLED UNTIL AFTER CONSTRUCTION CLEAN-UP IS COMPLETED AND FINAL.
11. LOCATE SMOKE DETECTORS A MINIMUM OF THREE (3) FEET FROM MECHANICAL DIFFUSERS. WALL-MOUNTED SMOKE DETECTORS SHALL BE LOCATED A MINIMUM OF 4" AND A MAXIMUM OF 12" FROM CEILING.
12. PROVIDE SYNCHRONIZATION OF ALL VISUAL NOTIFICATION APPLIANCE CIRCUITS. PROVIDE ALL REQUIRED SYNC MODULES. PROVIDE A MULTI-SYNC MODE SLAVE CONNECTION BETWEEN ALL SYNC MODULES.
13. VERIFY ALL FIELD SELECTABLE AUDIBILITY SETTINGS OF NOTIFICATION APPLIANCES WITH FIRE ALARM CONTRACTOR.
14. UPON COMPLETION OF THE FIRE ALARM SYSTEM INSTALLATION AND PROGRAMMING, THE INSTALLING CONTRACTOR SHALL PERFORM FINAL TESTING OF THE ENTIRE SYSTEM, PER ALL APPLICABLE CODES, AND SHALL COORDINATE AND PERFORM A FINAL FIRE ALARM SYSTEM INSPECTION.
15. PROVIDE OFF-SITE MONITORING AS REQUIRED BY THE INTERNATIONAL FIRE CODE, SECTION 907.6.5 AND THE LOCAL AUTHORITY HAVING JURISDICTION.
16. INSTALLING CONTRACTOR SHALL, PHYSICALLY, LABEL ALL INITIATING DEVICES AND NOTIFICATION APPLIANCE CIRCUIT END OF LINE (WHEN WIRING CLASS "B"). THESE LABELS SHALL BE IN PLACE PRIOR TO START-UP AND TESTING.

FIRE ALARM SYMBOL LEGEND

NOTE: ALL SYMBOLS MAY NOT BE USED ON THIS PROJECT

SYMBOL	DESCRIPTION	MOUNTING
FACP	FIRE ALARM CONTROL PANEL	WALL-TOP @ 66"
FPS	FIRE ALARM POWER SUPPLY	FIELD VERIFY
FSA	FIRE SYSTEM ANNUNCIATOR	WALL-TOP @ 66"
FSD	FIRE/SMOKE DAMPER	BY OTHERS
	SMOKE DETECTOR	CEILING
	DUCT SMOKE DETECTOR	BY OTHERS
	HEAT DETECTOR	CEILING
CM	ADDRESSABLE CONTROL MODULE	FIELD VERIFY
MM	ADDRESSABLE MONITOR MODULE	FIELD VERIFY
P	MANUAL PULL STATION	WALL @ 48"
R	CONTROL RELAY (MULTI-VOLTAGE)	FIELD VERIFY
RM	ADDRESSABLE RELAY MODULE	FIELD VERIFY
	MAGNETIC DOOR HOLDER	FIELD VERIFY
WF	WATER FLOW SWITCH	BY OTHERS
VS	VALVE SUPERVISORY SWITCH	BY OTHERS
KB	KNOX BOX	FIELD VERIFY
	BELL	BY OTHERS
	CEILING MOUNT STROBE	FIELD VERIFY
H	CEILING MOUNT HORN / STROBE	FIELD VERIFY
S	CEILING MOUNT SPEAKER / STROBE	FIELD VERIFY
	HORN	WALL @ 10'-0
	HORN / STROBE	WALL 80"-96"
SS	SPEAKER / STROBE	WALL 80"-96"
SP	SPEAKER	WALL @ 90"
	STROBE	WALL 80"-96"

ABBREVIATION	DESCRIPTION
E	EXISTING
G	WITH GUARD
P	PENDENT MOUNT
R	RESIDENTIAL (110V)
S	SOUNDER BASE
WP	WEATHER PROOF
EOL	END OF LINE RESISTOR
EOLR	END OF LINE RELAY
AWG	AMERICAN WIRE GAUGE
TWP	TWISTED PAIR
TWSP	TWISTED SHIELDED PAIR
FPLP	FIRE POWER LIMITED PLENUM
FPLR	FIRE POWER LIMITED RISER
NAC	NOTIFICATION APPLIANCE CIRCUIT
SLC	SIGNALLING LINE CIRCUIT

SPEAKER WATTAGE (3W) 75 STROBE CANDELA 30

DEVICE ADDRESS
L1D001 OR D01
(L – DENOTES LOOP #)
(D or M – DENOTES DETECTOR OR MODULE #)

1-#16/2 TWP
WIRE TYPE ABBREVIATED
CONDUCTOR COUNT
WIRE SIZE
OF CABLES (IF OMITTED ONLY 1 CABLE NEEDED)

APPLICABLE CODES:

MAINE UNIFORM ENERGY & BUILDING CODE
PORTLAND CITY CODE, CHAPTER10, FIRE PREVENTION & PROTECTION
NFPA 1, FIRE CODE, & NFPA 101, LIFE SAFETY CODE

RESERVED FOR CITY STAMP

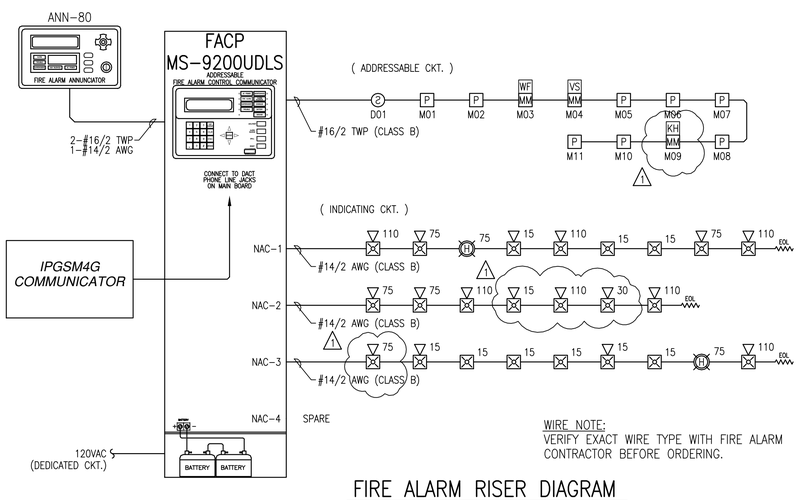

WIRE NOTE:
VERIFY EXACT WIRE TYPE WITH FIRE ALARM CONTRACTOR BEFORE ORDERING.

FIRE ALARM RISER DIAGRAM
SCHEMATIC: NO SCALE

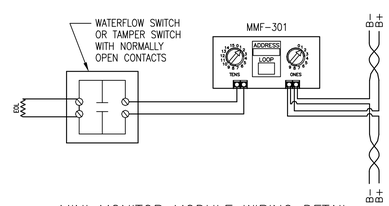

MINI MONITOR MODULE WIRING DETAIL
SCHEMATIC: NO SCALE

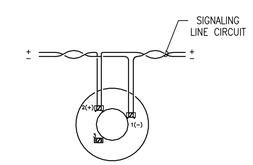

ADDRESSABLE SMOKE DETECTOR WIRING DETAIL
SCHEMATIC: NO SCALE

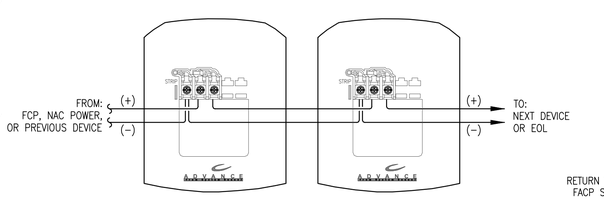

TYPICAL 2 WIRE STROBE WIRING DETAIL
SCHEMATIC: NO SCALE

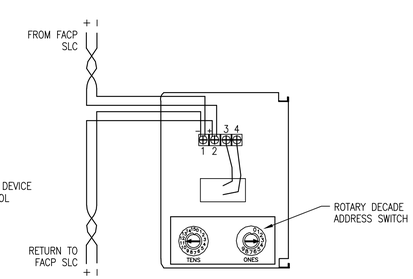

MANUAL PULL STATION WIRING DETAIL
SCHEMATIC: NO SCALE

OPERATIONS MATRIX

FIRE ALARM INPUT	FIRE ALARM OUTPUT	ACTIVATE ALARM INDICATOR	ACTIVATE AUDIBLE ALARM	ACTIVATE SUPERVISORY INDICATOR	ACTIVATE AUDIBLE SUPERVISORY SIGNAL	ACTIVATE TROUBLE INDICATOR	ACTIVATE AUDIBLE TROUBLE INDICATOR	TRANSMIT ALARM SIGNAL	TRANSMIT SUPERVISORY SIGNAL	TRANSMIT TROUBLE SIGNAL	ACTIVATE NOTIFICATION APPLIANCES
SMOKE DETECTORS		●	●					●			●
PULL STATIONS		●	●					●			●
WATERFLOW SWITCHES		●	●					●			●
VALVE TAMPER SWITCHES				●	●				●		
FIRE ALARM AC POWER FAIL						●	●			●	
FIRE ALARM LOW BATTERY						●	●			●	
OPEN CIRCUIT						●	●			●	
GROUND FAULT						●	●			●	
NAC SHORT CIRCUIT						●	●			●	
LOSS OF AC TO BUILDING						●	●			●	

REVISION	DESCRIPTION	DATE
0	ISSUED FOR REVIEW & APPROVAL	2/2/2017
1	REVISIONS PER AHJ	5/10/2017

Reviewed for Code Compliance Inspections Division Portland, Maine
Date: 06/19/17

CUNNINGHAM
Security Systems
10 Princes Point Road, Yarmouth, Maine 04096
Office: 207.846.3350 • Fax: 207.846.6080

123 WASHINGTON AVENUE
PORTLAND, MAINE 04101
CALCULATIONS, DETAILS, LEGEND, MATRIX, NOTES

DRAWN	JPB UNICAD JOB #17019
CHECKED	WAYNE B. HAWS NICET IV 90496
DATE	5/10/2017
REVISION	1
SCALE	1/8"=1'-0"

shop drawings created by: 5794 W. 4600 So. Hooper, UT 84315 Office: 801.985.0410
UNICAD Inc.
www.unicad.net
Fire Alarm Design & Drafting Services

FA-1