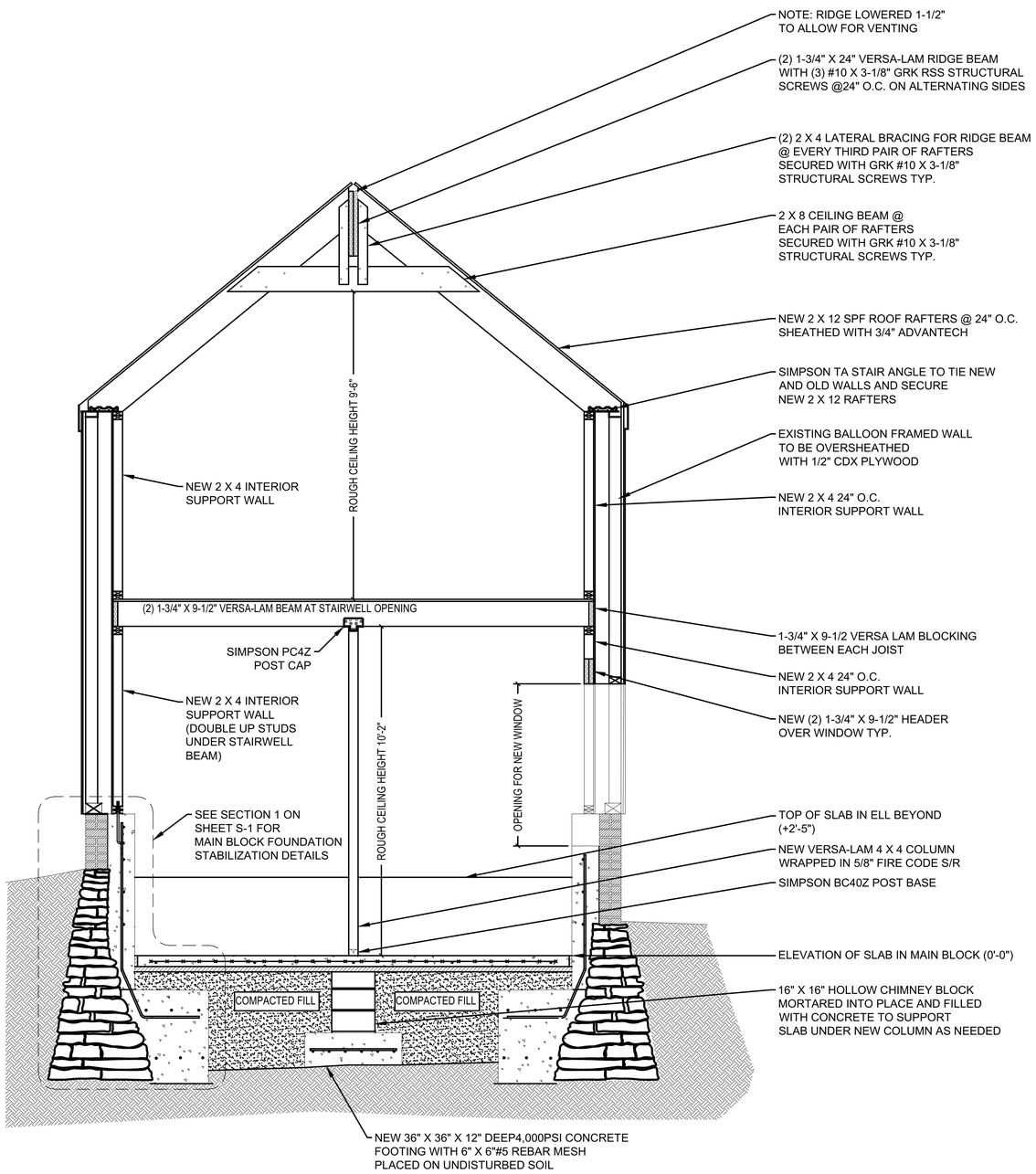

S 4 / S-3 SECTION OF MAIN BLOCK LOOKING EAST

SCALE: 1/2" = 1'-0" ON 24" X 36" SHEET

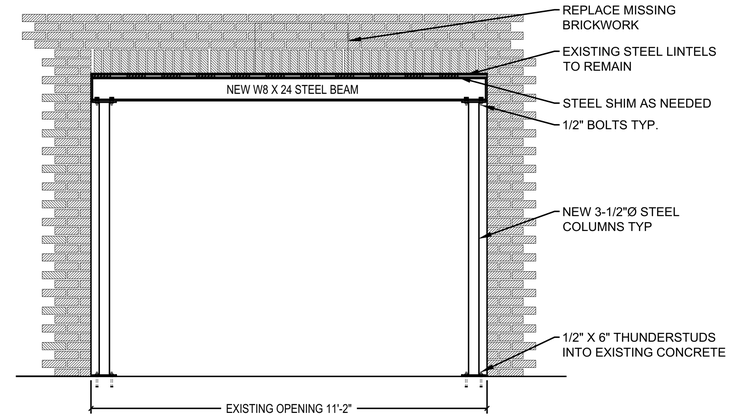

D 1 / S-3 DETAIL OF NEW STEEL BEAM AT OPENING BETWEEN STUDIO AND ELL

SCALE: 1/2" = 1'-0" ON 24" X 36" SHEET

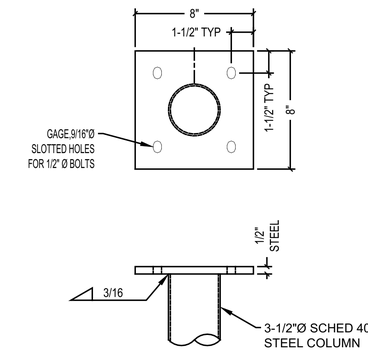

D 2 / S-3 DETAIL OF NEW STEEL BEAM COLUMN CAP AND BASE

N.T.S.

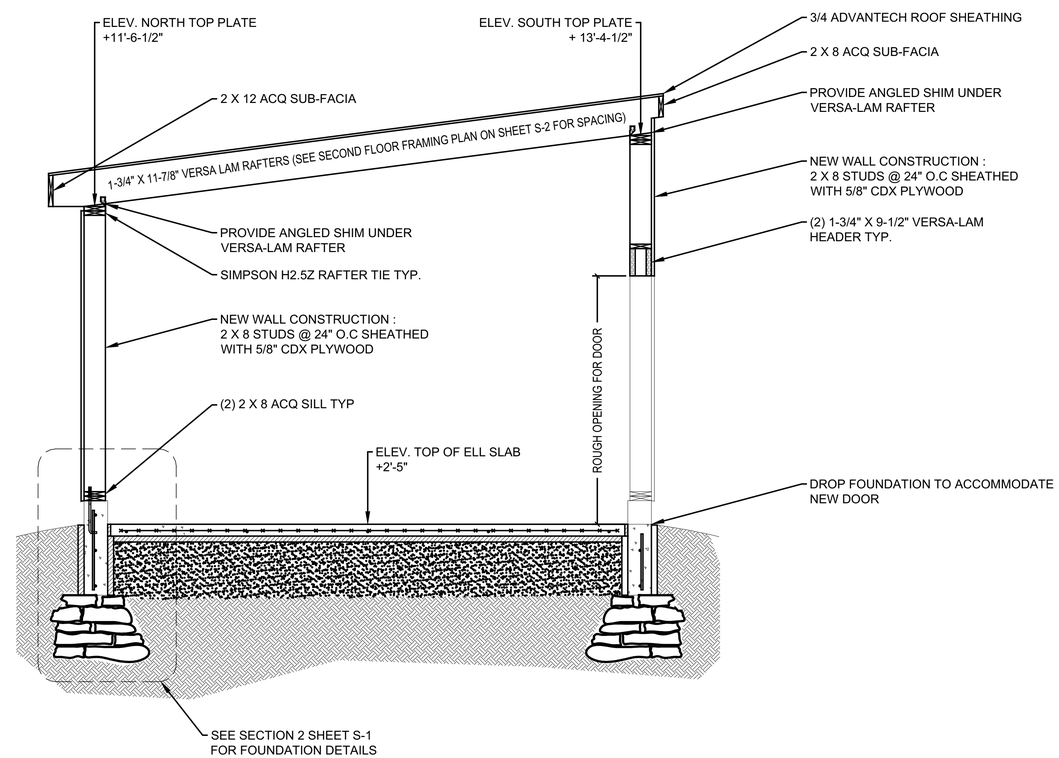

S 5 / S-3 SECTION OF NEW CONSTRUCTION AT ELL LOOKING WEST

SCALE: 1/2" = 1'-0" ON 24" X 36" SHEET

PERMIT SET

RESURGENCE
ENGINEERING & PRESERVATION, INC.
132 BRENTWOOD STREET
PORTLAND, ME 04103
207.773.4880
WWW.RESURGENCEENGINEERING.COM

Reviewed for Code Compliance Inspection Division Portland, Maine Date: 06/01/16

STATE OF MAINE ALFRED H. HODSON III No. 9246 LICENSED PROFESSIONAL ENGINEER

ENGINEER OF RECORD

Rehabilitation of the Main Block and Ell at
131 Washington Avenue
Jonathan Edwards
Portland, Maine

Date: 2 October 2015
Scale: As Shown
Revisions: 16 May 2016

Title: Framing Sections and Details

Sheet No: S-3