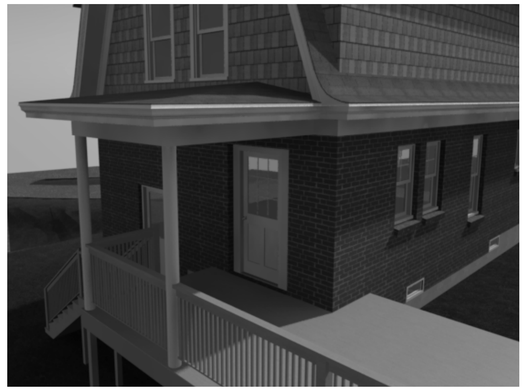

1 / A1.1 BACK PORCH

Applicable Codes - IRC 2015: Stairways and Guards.
- R311.7.1 Width - Not less than 36" clear width. Handrails may project 4.5", w/handrail on one side reducing clear width to 31.5". Proposed clear width with one handrail is 40"
- R311.7.2 Headroom - Not less than 6'-8". Proposed headroom exceeds 7'-7".
- R311.7.3 Vertical Rise - Not more than 147" between landings. Max proposed vertical rise is 52.5" to landing and 90.5" total.
- R311.7.5.1 Risers - Not more than 7 3/4". Proposed is 7.5" riser.
- R311.7.5.2 Treads - Tread depth no less than 10". Proposed is 11" tread.
- R311.7.6 Landings for stairways - Landings required at top and bottom, no narrower than width of flight served and at least 36" in length for straight runs. Proposed landings at top, bottom, and middle are at least as wide as flight served and more than 36" in length.
- R311.7.8 Handrails - Handrails shall be provided on not less than one side. Proposed stair has one handrail.
- R311.7.8.1 Handrail height - Handrail height from nosing must be between 34" and 38". Proposed handrail height is 36".
- R311.7.8.2 Handrail continuity - Handrail must be continuous for full flight of stairs from nose of top riser to nose of bottom riser, and be returned to post. Proposed handrail meets these requirements.
- R311.7.8.3 Grip-size - Proposed handrail will have a circular cross section not less than 1.25" and not more than 2" or have a perimeter not less than 4" but no greater than 6.25".
- R312.1.1 through R312.1.3 - The proposed stair and existing deck will have guards no less than 36" high w/ opening less than 4" wide.

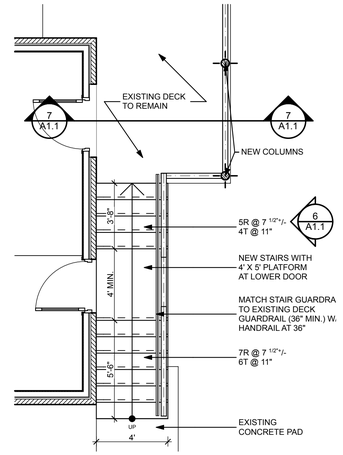

2 / A1.1 DECK FLOOR PLAN
SCALE: 1/4" = 1'-0"

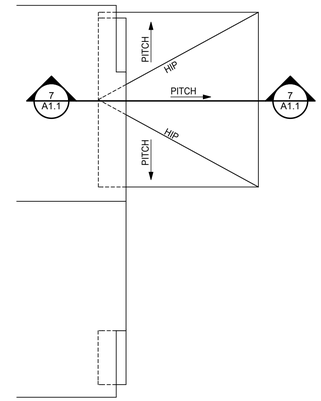

3 / A1.1 DECK ROOF PLAN
SCALE: 1/4" = 1'-0"

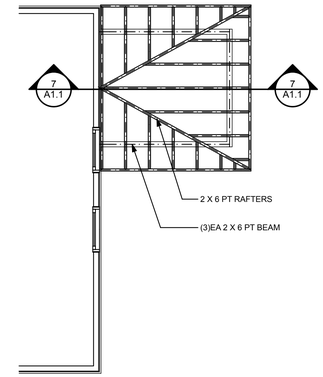

4 / A1.1 DECK ROOF FRAMING PLAN
SCALE: 1/4" = 1'-0"

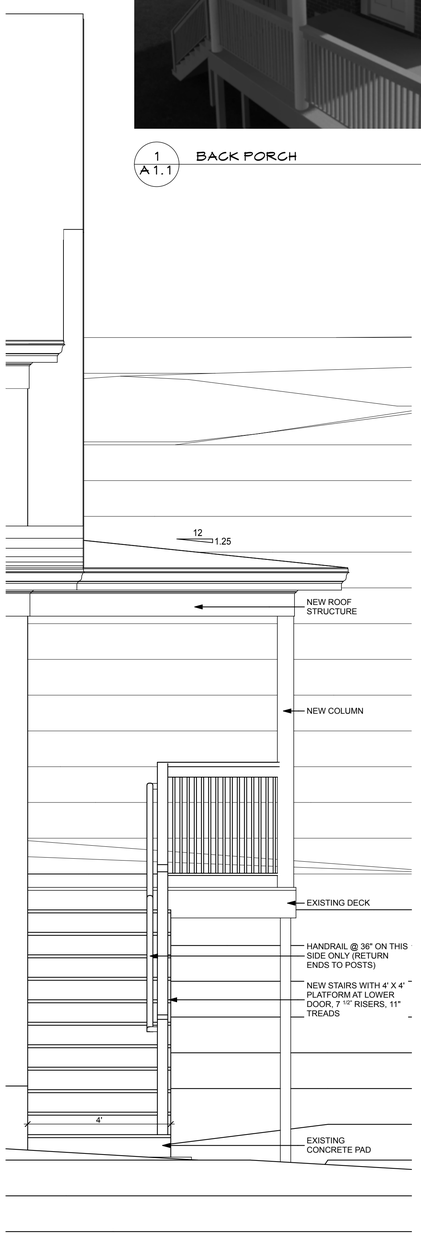

5 / A1.1 ELEVATION - WEST
SCALE: 1/2" = 1'-0"

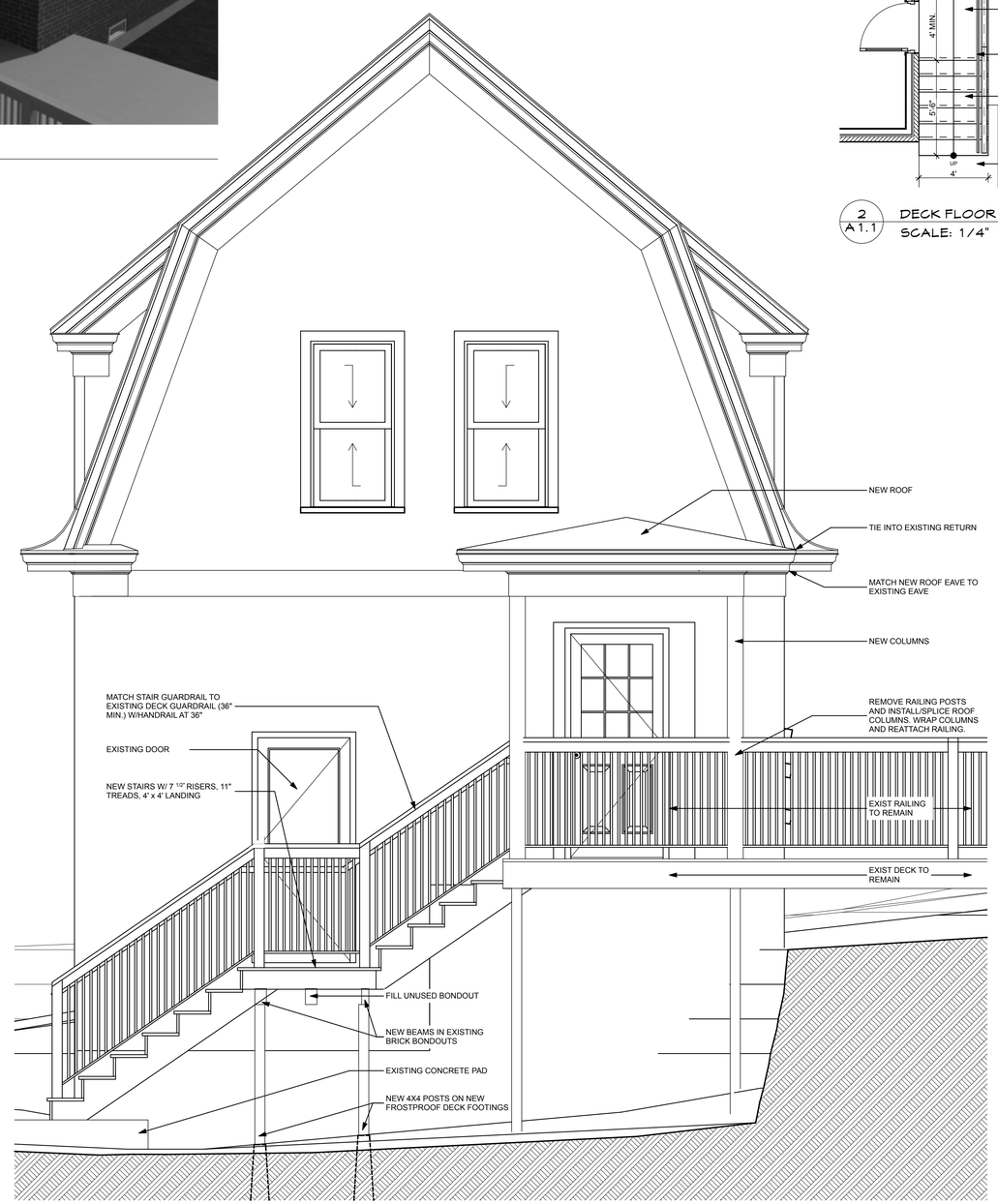

6 / A1.1 ELEVATION - SOUTH
SCALE: 1/2" = 1'-0"

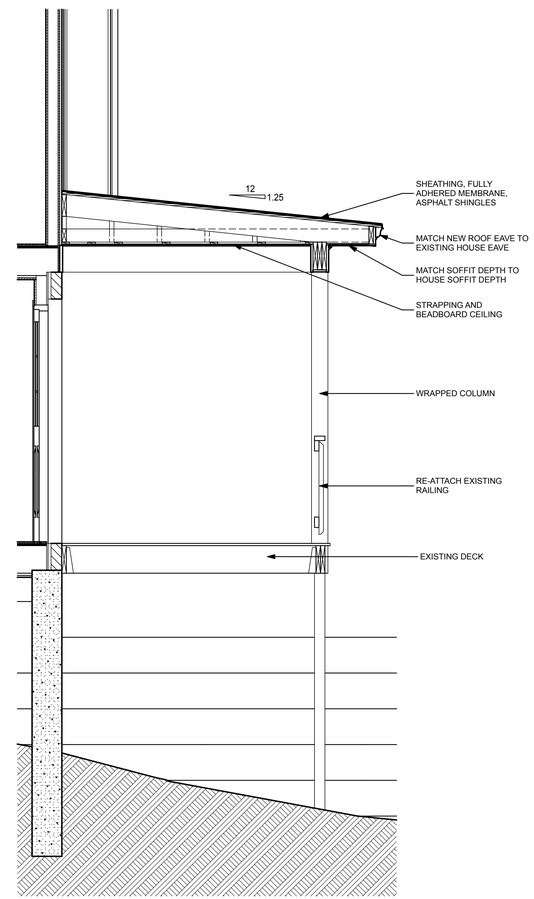

7 / A1.1 PORCH SECTION
SCALE: 1/2" = 1'-0"

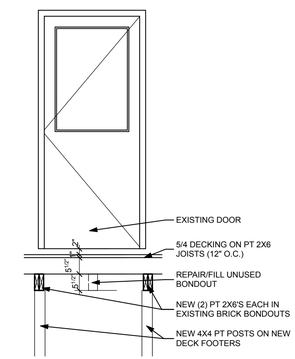

8 / A1.1 STAIR PLATFORM SECTION
SCALE: 1/2" = 1'-0"

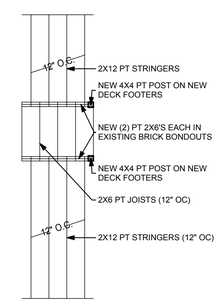

9 / A1.1 STAIR STRUCTURAL PLAN
SCALE: 1/4" = 1'-0"

JP SHERIDAN PORCH ROOF + EXTERIOR STAIRS

94 WALNUT STREET
PORTLAND, MAINE

LICENSED ARCHITECT ANNE E. CALLENDER No. 1861 STATE OF MAINE

WHIPPLE CALLENDER ARCHITECTS

PO BOX 1276
PORTLAND, ME 04104
P 207.775.2696
F 207.775.3631
www.whipplecallender.com

MARK	DATE	DESCRIPTION

DATE: 3/31/17
CHECKED BY: AEC
DRAWN BY: NPC
JOB: 16.EHP
SHEET TITLE: PORCH ROOF + NEW EXTERIOR STAIR FROM EXISTING DECK

A1.1

THIS DRAWING IS AN INSTRUMENT OF SERVICE AND SHALL REMAIN THE PROPERTY OF WHIPPLE CALLENDER ARCHITECTS. IT SHALL NOT BE USED FOR ANY OTHER PURPOSE THAT FOR WHICH IT IS SPECIFICALLY FURNISHED