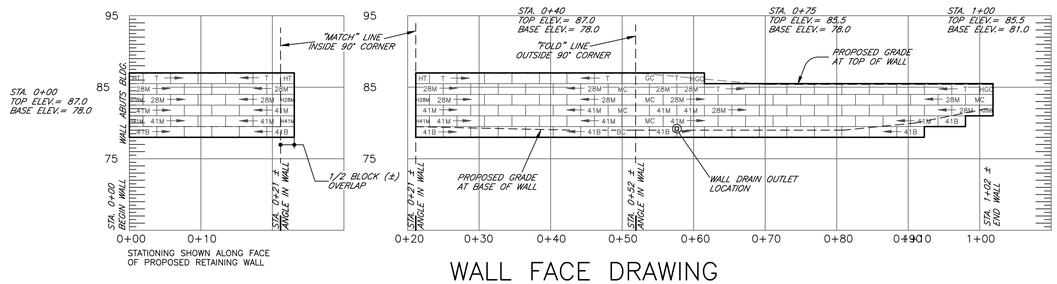

WALL FACE DRAWING

SCALE: 1" = 10'

BLOCK LEGEND & QUANTITIES

HGC	HALF GARDEN CORNER BLOCK	2
GC	GARDEN CORNER BLOCK	1
HT	HALF TOP BLOCK	3
T	TOP BLOCK	23
MC	MIDDLE CORNER BLOCK	5
BC	BOTTOM CORNER BLOCK	1
H28M	HALF 28" MIDDLE BLOCK	3
28M	28" MIDDLE BLOCK	48
H28B	HALF 28" BOTTOM BLOCK	1
H41M	HALF 41" MIDDLE BLOCK	3
41M	41" MIDDLE BLOCK	37
41B	41" BOTTOM BLOCK	24

NOTE: IF THE FIELD CONDITIONS INDICATE THE GRADE AT THE BASE AND/OR TOP OF THE WALL TO BE DIFFERENT FROM THAT SHOWN ON THESE PLANS, THE DESIGN ENGINEER SHALL BE CONTACTED TO VERIFY CHANGES TO THE WALL BASE COURSE AND/OR TOP OF WALL ELEVATION. THE GRADES SHOWN ON THIS PLAN ARE BASED ON THE RETAINING WALL PLAN (SHEET C100) PREPARED BY CASCO BAY ENGINEERING DATED 5/2/17.

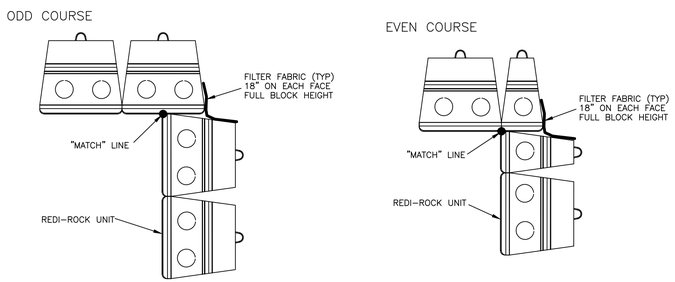

INSIDE CORNER – NON INTERLOCKING

NOT-TO-SCALE

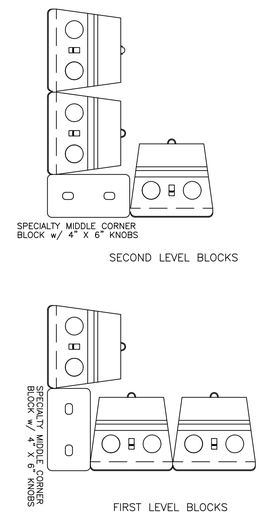

90° OUTSIDE CORNER
28" OR 41" BLOCKS

NOT-TO-SCALE

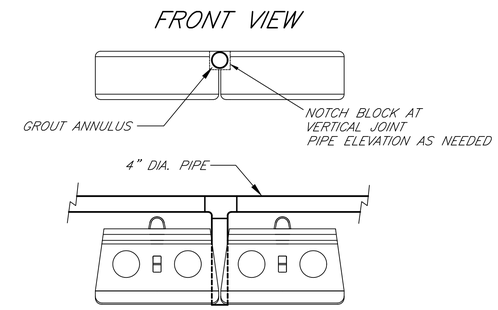

WALL DRAIN OUTLET – STA. 0+58±
PIPE PENETRATION DETAIL

NOT-TO-SCALE

WHERE THE WALL ABUTS A STRUCTURE, A FILTER FABRIC (MIRAFI 140N, OR EQUAL) SHALL BE PLACED VERTICALLY ALONG THE SEAM TO PREVENT MIGRATION OF SOILS BETWEEN THE WALL BLOCK AND THE STRUCTURE. THE FABRIC SHOULD EXTEND AT LEAST 18" ALONG THE STRUCTURE AND 18" ALONG THE REAR OF THE WALL BLOCK.

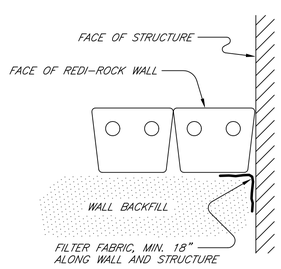

DETAIL
WALL ABUTTING STRUCTURE

(NOT TO SCALE)

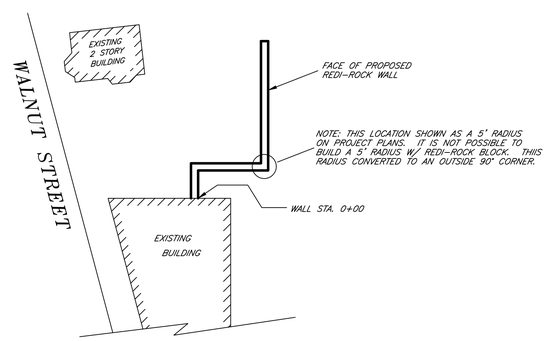

VICINITY SKETCH

(NOT TO SCALE)

SEE CONSTRUCTION DRAWINGS BY OTHERS

IT IS THE RESPONSIBILITY OF THE INSTALLER TO REVIEW THE NOTES AND DETAILS ON ALL SHEETS OF THIS PLAN SET

STATE OF MAINE
ERIC T. MERLUZZI
No. 13003
LICENSED
PROFESSIONAL ENGINEER

8/3/17

NOTE: THIS DRAWING WAS PREPARED FOR USE WITH REDI-ROCK (TM) RETAINING WALL SYSTEMS. CONTACT COLEMAN CONCRETE, INC. AT (603) 447-5936.

ERIC MERLUZZI, P.E.

184 ROWENTOWN ROAD, WENTWORTH, NH 03282

PHONE: (603) 786-2751 E-MAIL: em35@earthlink.net

CLIENT: COLEMAN CONCRETE, INC.
9 NH ROUTE 113, CONWAY, NH 03818

PROJECT: PROPOSED RETAINING WALL
131 WASHINGTON STREET, PORTLAND, ME

SHEET TITLE: RETAINING WALL DESIGN SHEET 2

DATE:	SCALE:	PROJECT No.:
AUGUST 3, 2017	AS SHOWN	2017-216

SHEET 2 OF 2