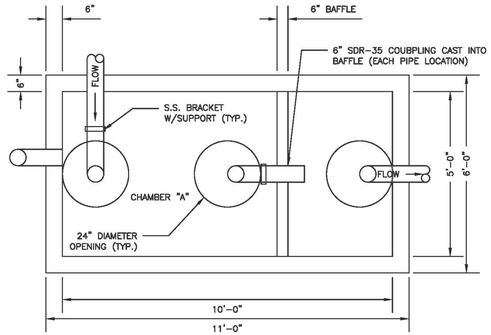

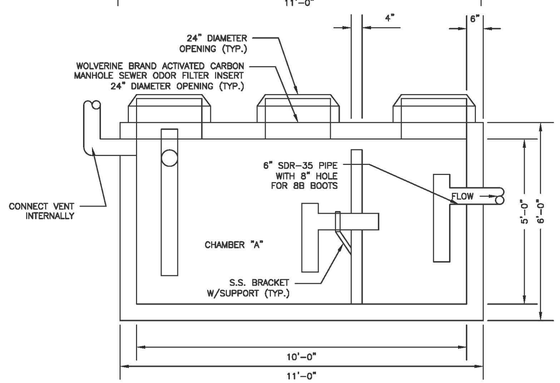

EXTERNAL GREASE TRAP DESIGN

NOT TO SCALE

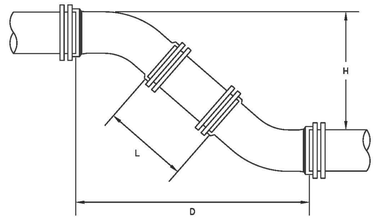

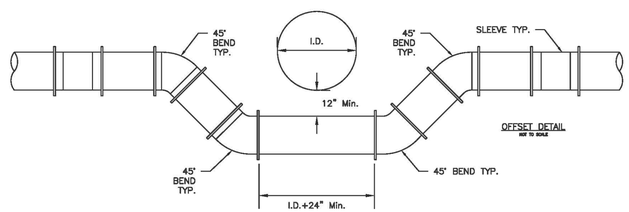

OFFSET DETAIL

NOT TO SCALE

NOTE: DIMENSIONS APPLICABLE FOR SIGMA COMPACT BENDS. FOR TYLER COMPACT BENDS, ADD 1/2" TO "D" DIMENSION AND SUBTRACT 1/2" FROM "L" DIMENSION. FOR OTHER FITTINGS REFER TO MANUFACTURER'S RECOMMENDATIONS.

TYPICAL MAIN OFFSET

NOT TO SCALE

	6" PIPE		8" PIPE		12" PIPE	
H	D	L	D	L	D	L
12"	1' 6-1/2"	0' 10-1/2"	1' 7-1/2"	0' 9-1/2"	1' 11-1/2"	0' 5-1/2"
13"	1' 7-1/2"	0' 11-7/8"	1' 8-1/2"	0' 10-7/8"	2' 0-1/2"	0' 6-7/8"
14"	1' 8-1/2"	1' 1-5/16"	1' 9-1/2"	1' 0-5/16"	2' 1-1/2"	0' 8-5/16"
15"	1' 9-1/2"	1' 2-11/16"	1' 10-1/2"	1' 1-11/16"	2' 2-1/2"	0' 9-11/16"
16"	1' 10-1/2"	1' 4-1/8"	1' 11-1/2"	1' 3-1/8"	2' 3-1/2"	0' 11-1/8"
17"	1' 11-1/2"	1' 5-9/16"	2' 0-1/2"	1' 4-9/16"	2' 4-1/2"	1' 0-9/16"
18"	2' 0-1/2"	1' 6-15/16"	2' 1-1/2"	1' 5-15/16"	2' 5-1/2"	1' 1-15/16"
19"	2' 1-1/2"	1' 8-3/8"	2' 2-1/2"	1' 7-3/8"	2' 6-1/2"	1' 3-3/8"
20"	2' 2-1/2"	1' 9-13/16"	2' 3-1/2"	1' 8-13/16"	2' 7-1/2"	1' 4-13/16"
21"	2' 3-1/2"	1' 11-3/16"	2' 4-1/2"	1' 10-3/16"	2' 8-1/2"	1' 6-3/16"
22"	2' 4-1/2"	2' 0-5/8"	2' 5-1/2"	1' 11-5/8"	2' 9-1/2"	1' 7-5/8"
23"	2' 5-1/2"	2' 2"	2' 6-1/2"	2' 1"	2' 10-1/2"	1' 9"
24"	2' 6-1/2"	2' 3-7/16"	2' 7-1/2"	2' 2-7/16"	2' 11-1/2"	1' 10-7/16"
25"	2' 7-1/2"	2' 4-7/8"	2' 8-1/2"	2' 3-7/8"	3' 0-1/2"	1' 11-7/8"
26"	2' 8-1/2"	2' 6-1/4"	2' 9-1/2"	2' 5-1/4"	3' 1-1/2"	2' 1-1/4"
27"	2' 9-1/2"	2' 7-11/16"	2' 10-1/2"	2' 6-11/16"	3' 2-1/2"	2' 2-11/16"
28"	2' 10-1/2"	2' 9-1/8"	2' 11-1/2"	2' 8-1/8"	3' 3-1/2"	2' 4-1/8"
29"	2' 11-1/2"	2' 10-1/2"	3' 0-1/2"	2' 9-1/2"	3' 4-1/2"	2' 5-1/2"
30"	3' 0-1/2"	2' 11-15/16"	3' 1-1/2"	2' 10-15/16"	3' 5-1/2"	2' 6-15/16"
31"	3' 1-1/2"	3' 1-5/16"	3' 2-1/2"	3' 0-5/16"	3' 6-1/2"	2' 8-5/16"
32"	3' 2-1/2"	3' 2-3/4"	3' 3-1/2"	3' 1-3/4"	3' 7-1/2"	2' 9-3/4"
33"	3' 3-1/2"	3' 4-3/16"	3' 4-1/2"	3' 3-3/16"	3' 8-1/2"	2' 11-3/16"
34"	3' 4-1/2"	3' 5-9/16"	3' 5-1/2"	3' 4-9/16"	3' 9-1/2"	3' 0-9/16"
35"	3' 5-1/2"	3' 7"	3' 6-1/2"	3' 6"	3' 10-1/2"	3' 2"
36"	3' 6-1/2"	3' 8-7/16"	3' 7-1/2"	3' 7-7/16"	3' 11-1/2"	3' 3-7/16"
37"	3' 7-1/2"	3' 9-13/16"	3' 8-1/2"	3' 8-13/16"	4' 0-1/2"	3' 4-13/16"
38"	3' 8-1/2"	3' 11-1/4"	3' 9-1/2"	3' 10-1/4"	4' 1-1/2"	3' 6-1/4"
39"	3' 9-1/2"	4' 0-11/16"	3' 10-1/2"	3' 11-11/16"	4' 2-1/2"	3' 7-11/16"
40"	3' 10-1/2"	4' 2-1/16"	3' 11-1/2"	4' 1-1/16"	4' 3-1/2"	3' 9-1/16"
41"	3' 11-1/2"	4' 3-1/2"	4' 0-1/2"	4' 2-1/2"	4' 4-1/2"	3' 10-1/2"
42"	4' 0-1/2"	4' 4-7/8"	4' 1-1/2"	4' 3-7/8"	4' 5-1/2"	3' 11-7/8"
43"	4' 1-1/2"	4' 6-5/16"	4' 2-1/2"	4' 5-5/16"	4' 6-1/2"	4' 1-5/16"
44"	4' 2-1/2"	4' 7-3/4"	4' 3-1/2"	4' 6-3/4"	4' 7-1/2"	4' 2-3/4"
45"	4' 3-1/2"	4' 9-1/8"	4' 4-1/2"	4' 8-1/8"	4' 8-1/2"	4' 4-1/8"
46"	4' 4-1/2"	4' 10-7/16"	4' 5-1/2"	4' 9-7/16"	4' 9-1/2"	4' 5-9/16"
47"	4' 5-1/2"	4' 11-15/16"	4' 6-1/2"	4' 10-15/16"	4' 10-1/2"	4' 6-15/16"
48"	4' 6-1/2"	5' 1-3/8"	4' 7-1/2"	5' 0-3/8"	4' 11-1/2"	4' 8-3/8"
49"	4' 7-1/2"	5' 2-13/16"	4' 8-1/2"	5' 1-13/16"	5' 0-1/2"	4' 9-13/16"
50"	4' 8-1/2"	5' 4-3/16"	4' 9-1/2"	5' 3-3/16"	5' 1-1/2"	4' 11-3/16"
51"	4' 9-1/2"	5' 5-5/8"	4' 10-1/2"	5' 4-5/8"	5' 2-1/2"	5' 0-5/8"
52"	4' 10-1/2"	5' 7-1/16"	4' 11-1/2"	5' 6-1/16"	5' 3-1/2"	5' 2-1/16"
53"	4' 11-1/2"	5' 8-7/16"	5' 0-1/2"	5' 7-7/16"	5' 4-1/2"	5' 3-7/16"
54"	5' 0-1/2"	5' 9-7/8"	5' 1-1/2"	5' 8-7/8"	5' 5-1/2"	5' 4-7/8"
55"	5' 1-1/2"	5' 11-5/16"	5' 2-1/2"	5' 10-5/16"	5' 6-1/2"	5' 6-5/16"

DESIGN NOTES:

1) ANY ALTERNATE TRENCHING METHODS SHALL BE APPROVED IN ADVANCE BY THE CITY.
2) ALL CONSTRUCTION METHODS SHALL CONFORM TO THE CITY OF PORTLAND TECHNICAL STANDARDS FIGURE II-2.
3) BRACING & SHEETING OR OTHER TRENCH PROTECTION TO BE PROVIDED TO MEET APPLICABLE STATE AND O.S.H.A SAFETY STANDARDS. ALL SUCH TRENCH PROTECTION SHALL BE THE RESPONSIBILITY OF THE CONTRACTOR.
4) WHERE APPLICABLE, PERFORATIONS IN STORM DRAIN (PERF.SD) SHALL BE ORIENTED UP.
5) ALL STORM DRAINS SHALL BE PVC SDR 35 MIN PS-46 RATING OR OR IN ACCORDANCE WITH CITY OF PORTLAND TECHNICAL MANUAL , SECTION 2 – SANITARY SEWER AND STORM DRAIN – PART 2.5.2
6) IN PAVED AREAS, DEPTHS OF GRAVEL AND HOT MIX ASPHALT PAVEMENT SHALL MATCH THE GREATER OF EXISTING CONDITIONS OR THE REQUIREMENTS FOR THE CORRESPONDING STREET CLASSIFICATION.

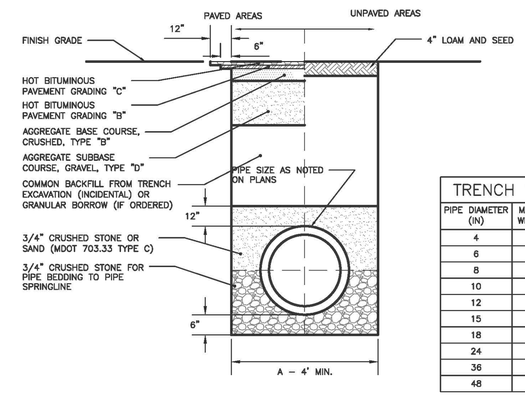

TRENCH WIDTH	
PIPE DIAMETER (IN)	MAX. TRENCH WIDTH, A (FT)
4	4
6	4
8	4
10	4
12	5
15	5
18	5
24	6
36	6
48	7

CITY OF PORTLAND TYPICAL PIPE TRENCH DETAIL

NOT TO SCALE

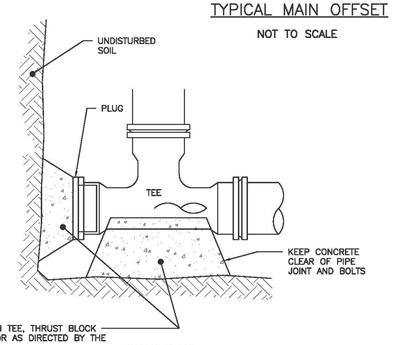

NOTE: IF DEAD END WITH TEE, THRUST BLOCK WOULD BE REQUIRED OR AS DIRECTED BY THE ENGINEER

END SECTION

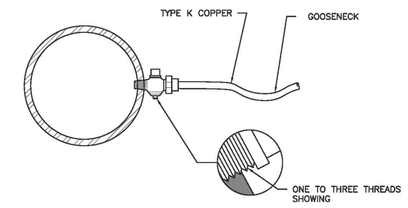

SERVICE TAP

(3/4" AND 1" C.C. THREAD)
NOT TO SCALE

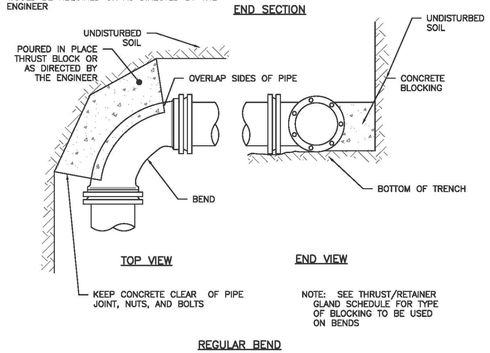

NOTE: SEE THRUST/RETAINER GLAND SCHEDULE FOR TYPE OF BLOCKING TO BE USED ON BENDS

REGULAR BEND

THRUST BLOCKING

NOT TO SCALE

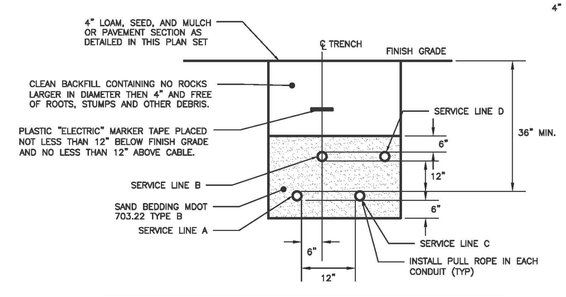

CONDUIT TYPE				
SERVICE	CONDUIT SIZE	GRASS AND PAVED AREAS	UTILITY	REMARKS
A	2-5"	SCHEDULE 40 PVC ELECTRICAL GRADE	PRIMARY POWER	SEE NOTE 1
B	2-4"	SCHEDULE 40 PVC	COMMUNICATION	–
C	2-4"	SCHEDULE 40 PVC ELECTRICAL GRADE	SPARE	IF REQUIRED
D	2-4"	SCHEDULE 40 PVC	CABLE	–

NOTE:

1. ONE CONDUIT CAPPED FOR SPARE, PROVIDE GALVANIZED STEEL LONG SWEEP AT RISER POLE AND EXTEND GALVANIZED CONDUIT TO 10" ABOVE GRADE AT POLE WITH STAND-OFF BRACKETS.

2. MINIMUM SEPARATION OF 24 INCHES BETWEEN PRIMARY CABLE/CONDUIT AND GAS LINES SHALL BE MAINTAINED.

UTILITY TRENCH – PRIMARY AND SECONDARY POWER, TELEPHONE, AND CABLE

NOT TO SCALE

NOTE:
1. THE WATER TRENCH SHALL BE CONSTRUCTED IN ACCORDANCE WITH THE PORTLAND WATER DISTRICT STANDARD DETAILS & SPECIFICATIONS.
2. IF LESS THAN 5'-6" OF COVER IS POSSIBLE ADD 1 INCH OF "BLUE DOW" RIGID INSULATION FOR EVERY 12" LESS COVER.

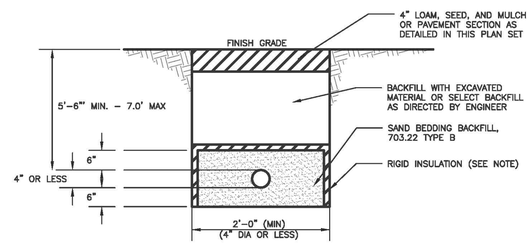

WATER SERVICE TRENCH SECTION DETAIL

NOT TO SCALE

NOTES:
1. CONTRACTOR TO SUBMIT PLAN FOR CONNECTING WATER SERVICE TO WATER MAIN FOR NON-TYPE K COPPER SERVICE LINES AND NON-D.I. WATER MAIN
2. ALL CONSTRUCTION SHALL BE IN ACCORDANCE WITH PORTLAND WATER DISTRICT STANDARDS AND PROCEDURES

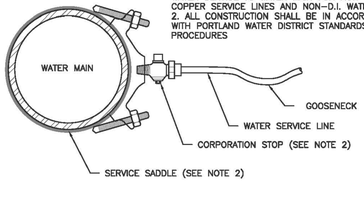

SERVICE SADDLE

(ALL THREAD SIZES)

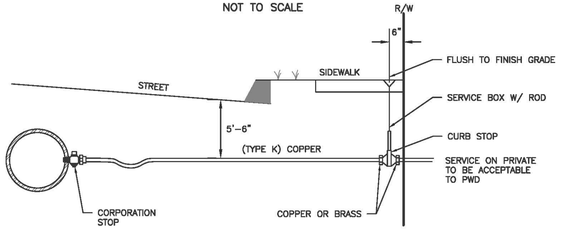

TYPICAL SERVICE CONNECTION

NOT TO SCALE

ISSUED FOR PRE-APP

ISSUED FOR	BY DATE
PRELIMINARY SUB	WHS 12/14/15

REVISION	REV. DATE

UTILITY DETAILS

EAST BAYSIDE LOFTS

REDFERN MUNJOY, LLC.
P.O. BOX 8816 PORTLAND, ME 04104

DRAWING NAME:
PROJECT NAME:
CLIENT:

ACORN ENGINEERING, INC.

THIS PLAN SHALL NOT BE MODIFIED WITHOUT WRITTEN PERMISSION FROM ACORN ENGINEERING, INC. ANY MODIFICATION, WHETHER BY HAND OR OTHERWISE, SHALL BE AT THE USER'S SOLE RISK AND WITHOUT LIABILITY TO ACORN ENGINEERING, INC.

ACORN ENGINEERING, INC.
158 DANFORTH STREET PORTLAND, MAINE 04102
(207) 775-2653

FILE:	1053_DETAILS
DATE:	12/5/2014
JN:	1053
SCALE:	NTS
DESIGNED BY:	WHS
DRAWN BY:	MAG
CHECKED BY:	WHS

DRAWING NO.
C-42