MUA FAN INFORMATION – Job#2672323

FAN UNIT NO.	TAG	FAN UNIT MODEL #	BLOWER	HOUSING	CFM	ESP.	RPM	H.P.	B.H.P.	ø	VOLT	FLA	WEIGHT (LBS.)	SONES	BURNER EFFICIENCY(%)
1		A2-IBT-400-200-200-G15	G15-PB	A2-IBT-400-200-200	3350	1.500	1212	5.000	3.8620	3	208	15.0	1339	25	80

GAS FIRED MAKE-UP AIR UNIT(S)

FAN UNIT NO.	TAG	INPUT BTUs	OUTPUT BTUs	TEMP. RISE	REQUIRED INPUT GAS PRESSURE	GAS TYPE
1		384412	307530	85 deg F	7 in. w.c. - 14 in. w.c.	Natural

FAN OPTIONS

FAN UNIT NO.	TAG	OPTION (Qty. - Descr.)
1		1 - Standard Electrical Connection (main and control panel) for Standing Power - Single Module. If a Non-DCV Prewire is used on the IBT Heater, the #28, #47, "NS", "MA", or "E2" Option Prewire must be selected. Do not provide supply starter in prewire.
		1 - Motorized Backdraft Damper for A2-I Housing
		1 - Heated Drain System For 2 Furnaces. Drains Flue Condensation From Furnaces. Required For Winter Design Temp of 0 degrees F or Lower.
		1 - Inlet Pressure Gauge, 0-35"
		1 - Manifold Pressure Gauge, 0 to 10" wc, 2 Furnaces
		1 - Full Crating For Commercial Heater
		1 - Insulated Blower Section Size 1-2 Commercial
		1 - 5'' DuraVent Type B High-Wind Cap. High Wind B Vent cap meets the UL standard for "high Wind" which is a 45 MPH test. Used with 2 furnaces. Replaces 5RP12
		1 - 3 Year Extended Motor Warranty
		1 - Extra Set of Belts
		1 - Separate 120V Wiring Package (Required and used only for DCV or Prewire with VFD) - Three Phase Only

FAN ACCESSORIES

FAN UNIT NO.	TAG	EXHAUST			SUPPLY			
		GREASE CUP	GRAVITY DAMPER	WALL MOUNT	SIDE DISCHARGE	GRAVITY DAMPER	MOTORIZED DAMPER	WALL MOUNT
1							YES	

CURB ASSEMBLIES

NO.	ON FAN	WEIGHT	ITEM	SIZE
1	# 1	88 LBS	Curb	31.000"W x 79.000"L x 24.000"H Insulated
	# 1		Rail	6.000"W x 31.000"L x 24.000"H

Reviewed for Code Compliance
Inspections Division
Approved with Conditions
Date: 11/03/16

JOB CN Shawarma Job MUA options		
LOCATION , 0		
DATE 6/2/2016	JOB # 2672323	
DWG # 1	DRAWN BY BFC-21	
REV.	SCALE 3/8" = 1'-0"	

FAN #1 A2-IBT-400-200-200-G15 - HEATER
1. INDIRECT BENT TUBE GAS FIRED HEATER WITH 15" BLOWER, 2 FURNACES, ELECTRONIC FULL MODULATION, CONSTANT 80% EFFICIENCY, AND 12:1 MAX TURNDOWN FOR NG, (10:1 MAX TURNDOWN FOR LP). STAINLESS STEEL BURNER AND HEAT EXCHANGER.
2. INTAKE HOOD WITH EZ FILTERS
3. DOWN DISCHARGE - AIR FLOW RIGHT -> LEFT
4. SEPARATE 120V ELECTRICAL CONNECTION FOR ALL IBT HEATERS WITH 1 MODULE FOR STANDING POWER. 120V MUST BE RUN BY ELECTRICIAN FROM BUILDING PANEL TO MUA SWITCH.
5. MOTORIZED BACK DRAFT DAMPER 22.75" X 24" W/JACK SHAFT, STANDARD GALVANIZED CONSTRUCTION, 3/4" REAR FLANGE, INCLUDES LF120S MOTOR, FOR SIZE 2 INDIRECT FIRED HOUSING
6. FACTORY ASSEMBLED IBT CONDENSATION DRAIN KIT FOR 2 FURNACE UNITS. REQUIRED FOR WINTER DESIGN TEMP OF 0 DEGREES F AND LOWER.
KIT INCLUDES DRAIN ASSEMBLY, MOUNTING SCREWS, ZIP TIES, AND HEAT TAPE FOR DOUBLE FURNACE UNIT. FIELD PIPING FROM UNIT BY OTHERS.
7. GAS PRESSURE GAUGE, 0-35", 2.5" DIAMETER, 1/4" THREAD SIZE
8. GAS PRESSURE GAUGE, 0 TO +10 INCHES WC., 2.5" DIAMETER, 1/8" THREAD SIZE, REAR THREAD, FOR 2 FURNACES
9. FULL CRATING FOR COMMERCIAL HEATERS FOR SHIPPING.
10. INSULATED BLOWER HOUSING SIZES 1-2 COMMERCIAL MODULAR
11. 5" DURAVENT TYPE B HIGH-WIND CAP. HIGH WIND B VENT CAP MEETS THE UL STANDARD FOR "HIGH WIND" WHICH IS A 45 MPH TEST. USED WITH 2 FURNACES. REPLACES 5RP12
12. 3 YEAR EXTENDED WARRANTY FOR FAN MOTOR. PARTS ONLY; DOES NOT INCLUDE LABOR.
13. EXTRA SET OF V-BELTS. ONLY TO BE ORDERED AS FAN OPTION AT TIME FAN IS ORDERED.
14. SEPARATE 120VAC WIRING PACKAGE FOR MAKE-UP AIR UNITS. OPTION MUST BE SELECTED WHEN MOUNTING VFD IN PREWIRE PANEL OR WITH DCV PACKAGE. PROVIDES SEPARATE 120VAC INPUT TO SUPPLY FAN. THIS 120V SIGNAL MUST BE RUN BY ELECTRICIAN FROM DCV TO MUA SWITCH.

SUPPLY SIDE HEATER INFORMATION:

WINTER TEMPERATURE = 0°F. TEMP. RISE = 85°F.
BTUs CALCULATED OFF STANDARD AIR DENSITY
OUTPUT BTUs AT ALTITUDE OF 0.0 ft. = 307530
INPUT BTUs AT ALTITUDE OF 0.0 ft. = 384413

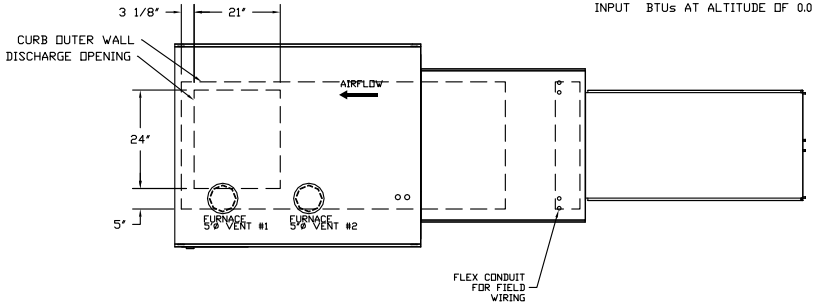

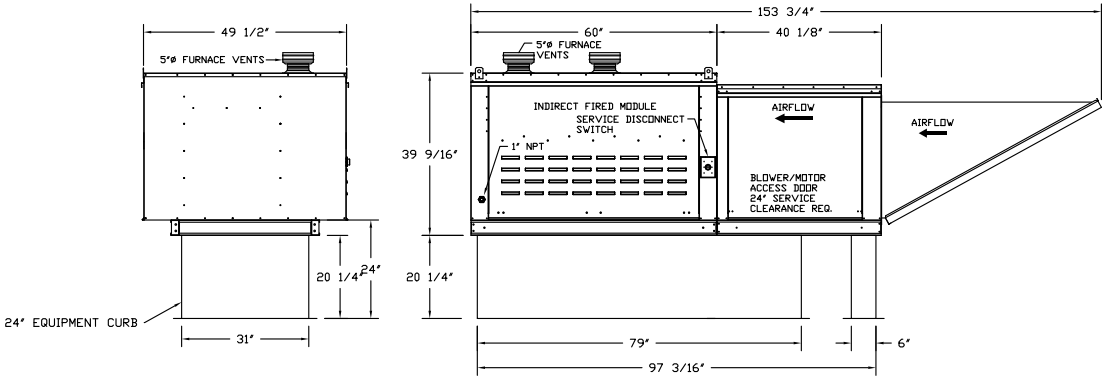

Reviewed for Code Compliance
Inspections Division
Approved with Conditions
Date: 11/03/16

JOB CN Shawarma Job MUA options		
LOCATION , 0		
DATE 6/2/2016	JOB # 2672323	
DWG # 2	DRAWN BY BFC-21	
REV.	SCALE 1/4" = 1'-0"	

FAN#1 - HEATER PERFORMANCE CURVES.

Reviewed for Code Compliance
Inspections Division
Approved with Conditions
Date: 11/03/16

3350 CFM, 1.571 SP @ 1212 RPM and 3.862 BHP at 0 feet and 0 deg F

* Please note that these curves were adjusted for job specific temperature and altitude.

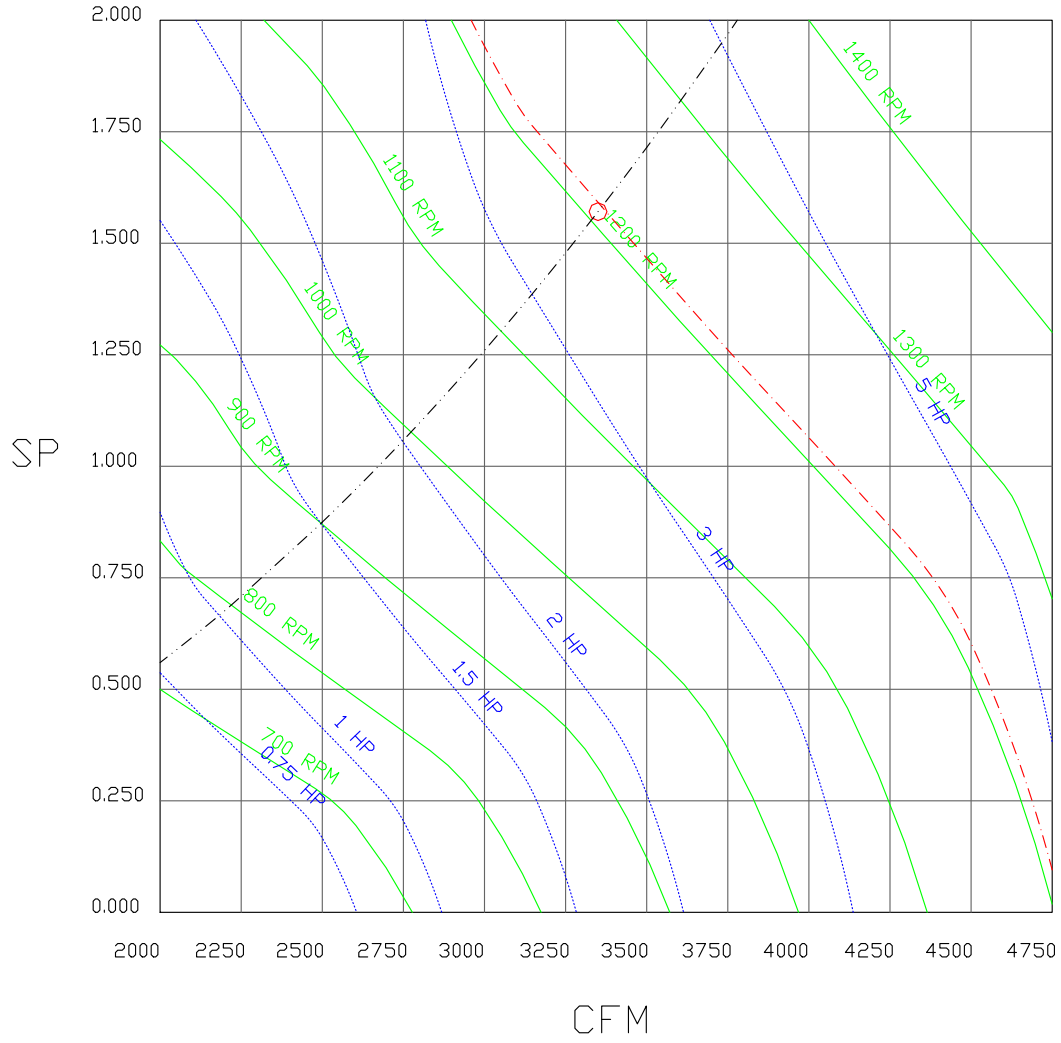

JOB CN Shawarma Job MUA options		
LOCATION , 0		
DATE 6/2/2016	JOB # 2672323	
DWG # 3	DRAWN BY BFC-21	
REV.	SCALE 3/8" = 1'-0"	

Ind Fired Bent Tube Htr Wiring	JOB 2672323 - CN Shawarma Job MUA options	
DRAWING NUMBER IBT2672323-1	SHIP DATE 6/2/2016	MODEL A2-IBT-400-200-200-G15

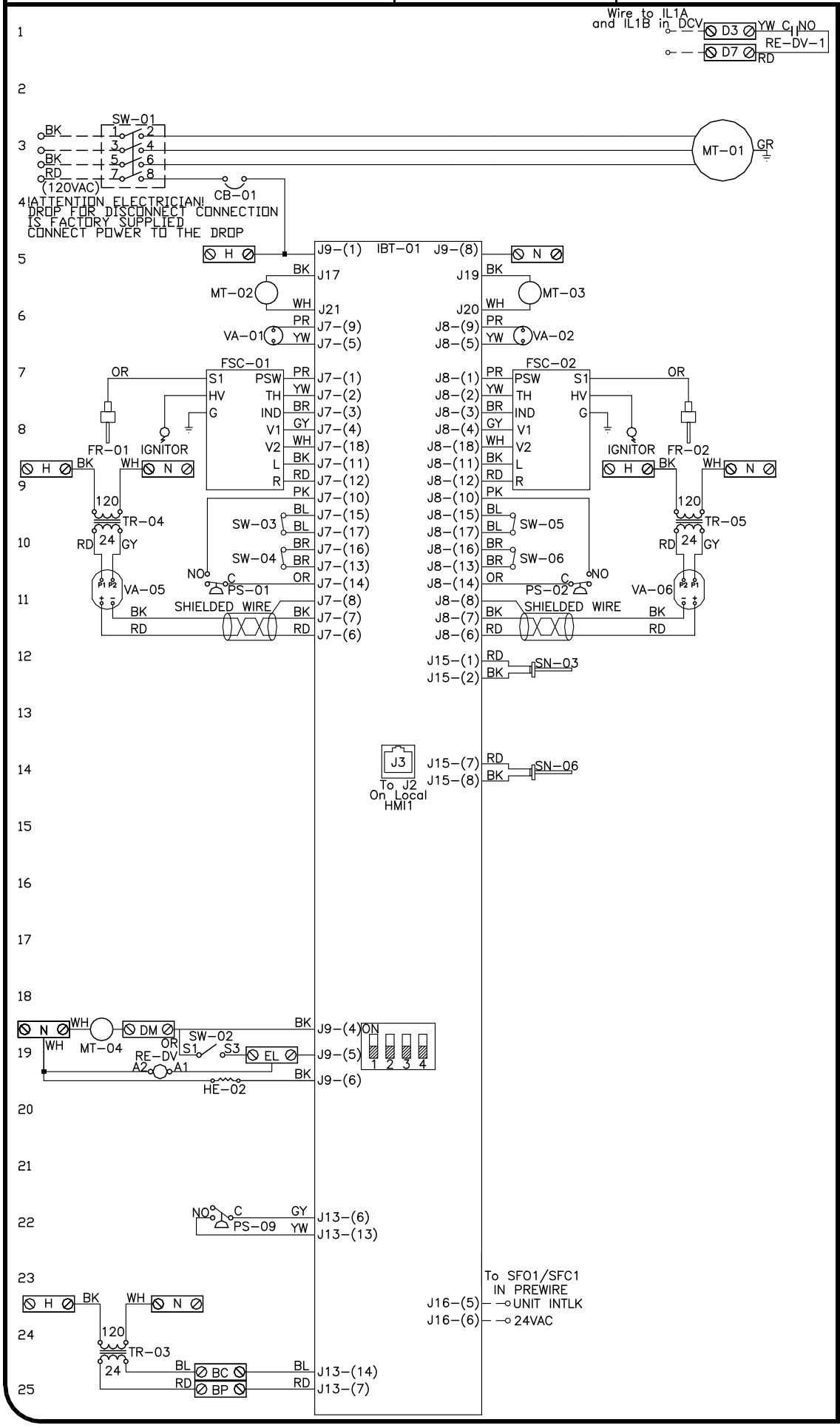

Installed Options

Drain Heater

DCV Wiring

Component Identification

Label	Description	Location
CB-01	10A Circuit Breaker S201U-K10	[3]
FR-01	Flame Rod 1	[8]
FR-02	Flame Rod 2	[8]
FSC-01	Flame Safety Controller 1	[8]
FSC-02	Flame Safety Controller 2	[8]
HE-02	Drain Heater	[20]
MT-01	Supply motor	[2]
MT-02	Power Vent 1	[5]
MT-03	Power Vent 2	[5]
MT-04	Motorized Damper Motor	[19]
PS-01	Vent Proving 1	[11]
PS-02	Vent Proving 2	[11]
PS-09	Airflow Proving Switch	[22]
RE-DV	DCV Damper Relay	[1][19]
SN-03	Intake Temperature Sensor	[12]
SN-06	Discharge Temperature Sensor	[14]
SW-01	Main Disconnect Switch	[3]
SW-02	Damper End Limit Switch	[19]
SW-03	Roll Out Switch 1	[9]
SW-04	High Temp Switch 1	[10]
SW-05	Roll Out Switch 2	[9]
SW-06	High Temp Switch 2	[10]
TR-03	Board Power Transformer 40VA	[24]
TR-04	Mod Valve 1 Transformer 20VA	[19]
TR-05	Mod Valve 2 Transformer 20 VA	[19]
VA-01	Main Gas Valve 1	[6]
VA-02	Main Gas Valve 2	[6]
VA-05	Modulating Gas Valve 1	[10]
VA-06	Modulating Gas Valve 2	[10]

MOTOR INFO

SUPPLY 5HP-208V-3P-15.0FLA

ELECTRICAL INFORMATION

MOTOR CIRCUIT MCA: 18.8A
CONTROL CIRCUIT MCA: 5.5A
MOTOR CIRCUIT MOP: 30A
CONTROL CIRCUIT MOP: 15A

NOTES

- - - - DENOTES FIELD WIRING
——— DENOTES INTERNAL WIRING

** TERMINALS S4 AND NF & AF SERIES AC

WIRE COLOR

BK - BLACK	YW - YELLOW
BL - BLUE	GR - GREEN
BR - BROWN	GY - GRAY
OR - ORANGE	PR - PURPLE

Date: 11/03/16

Reviewed for Code Compliance
Approved as Noted
Approved with Conditions

CITY OF PORTLAND, MAINE

Installation Wiring	JOB 2672323 - CN Shawarma Job MUA options	
DRAWING NUMBER RP2672323-1	SHIP DATE 6/2/2016	MODEL A2-IBT-400-200-200-G15

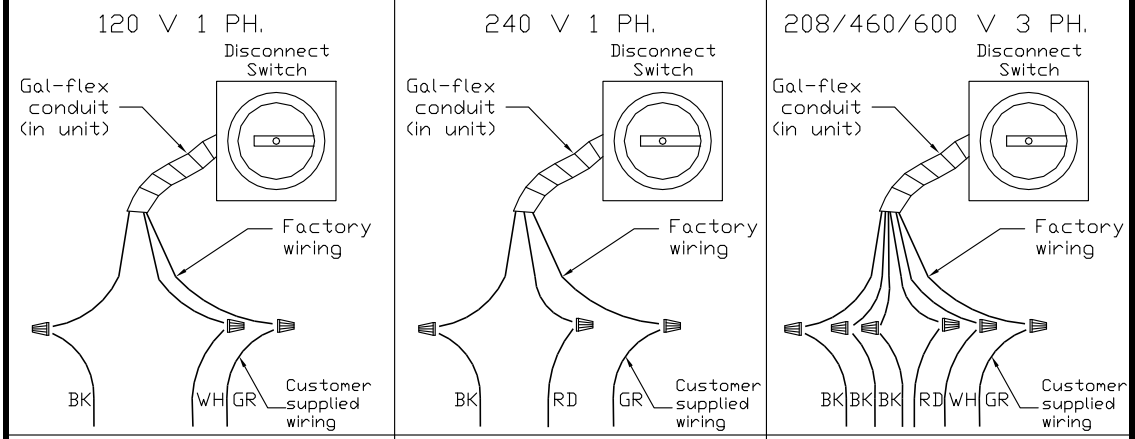

POWER FROM DEDICATED BREAKER

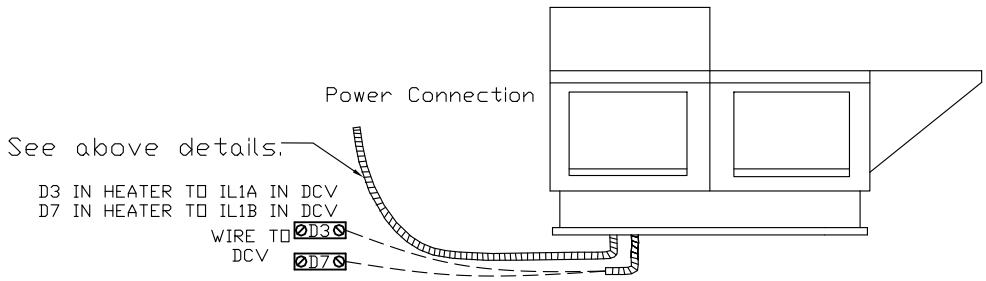

Installed Options

DCV Connections

Factory Settings

(Leave as default if not listed)

Tempering Mode = Discharge
Activate Based On = Intake
Of Heat Stages = 2

Blower Mode = Manual

Drain Heater = On

NOTES

WIRE CI

BK - BLACK
BL - BLUE
BR - BROWN
OR - ORANGE
RD - RED
WH - WHITE

Date:

Reviewed for Code Compliance
Approved as Noted
Approved with Conditions

11/03/16

CITY OF PORTLAND, MAINE