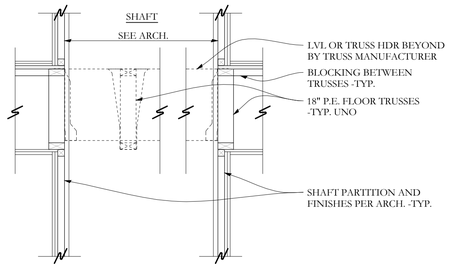

SECTION DD S2-3 3/4"=1'-0

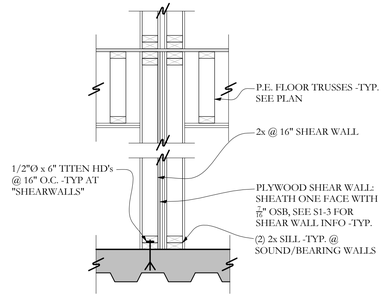

SECTION EE S2-3 3/4"=1'-0

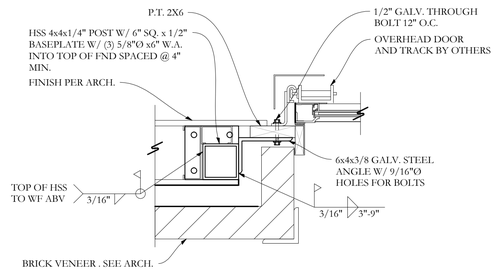

PLAN FF S2-3 1 1/2"=1'-0

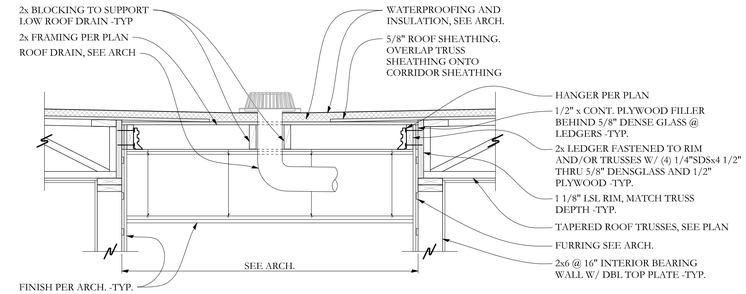

SECTION GG S2-3 3/4"=1'-0

TYPICAL FRAMING AT ROOF DRAIN

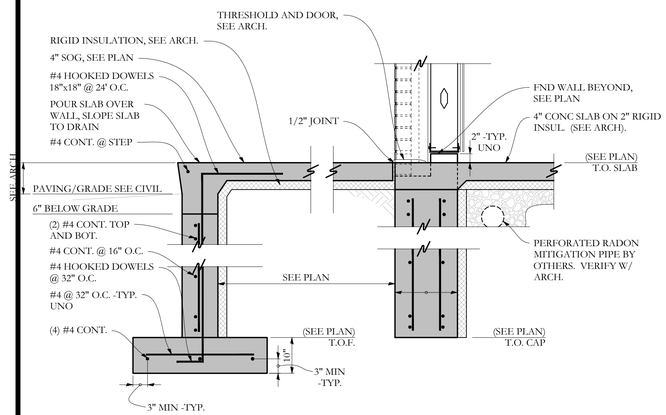

SECTION AA S2-3 3/4"=1'-0

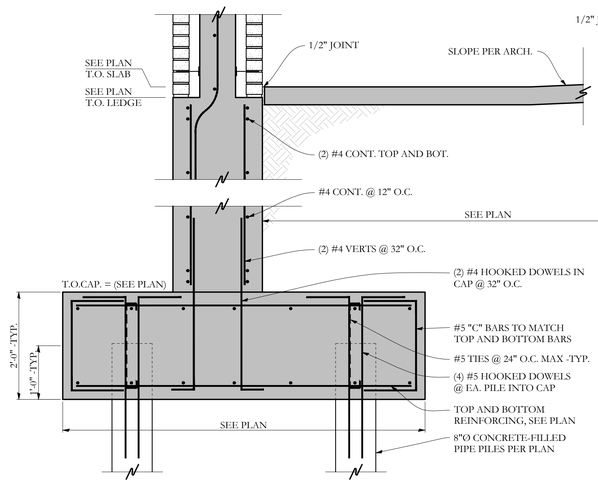

SECTION BB S2-3 3/4"=1'-0

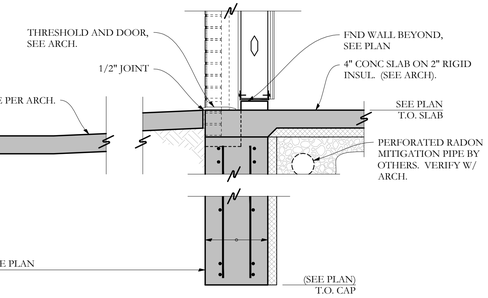

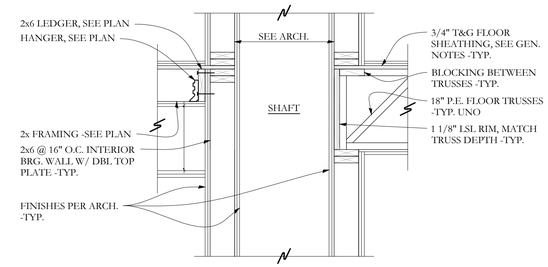

SECTION CC S2-3 3/4"=1'-0

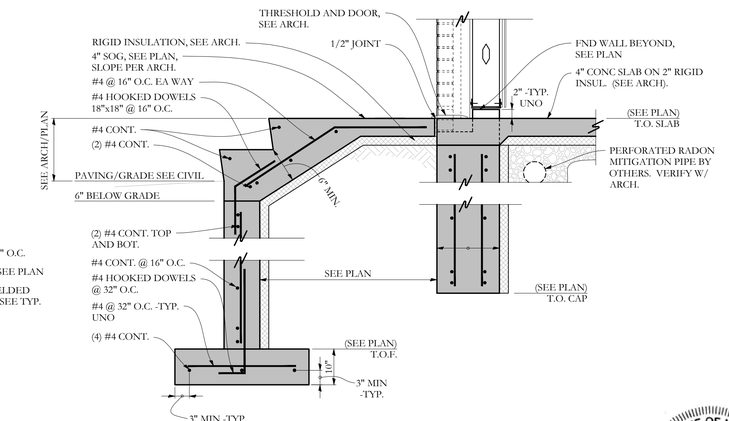

SECTION Z S2-3 3/4"=1'-0

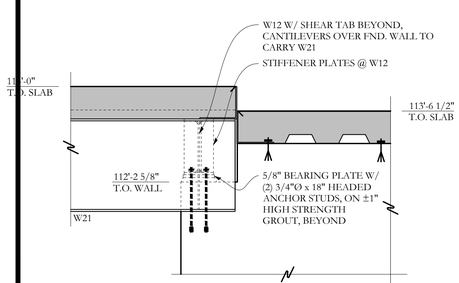

SECTION W S2-3 3/4"=1'-0

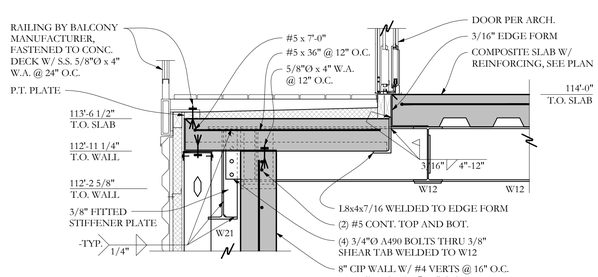

SECTION X S2-3 3/4"=1'-0

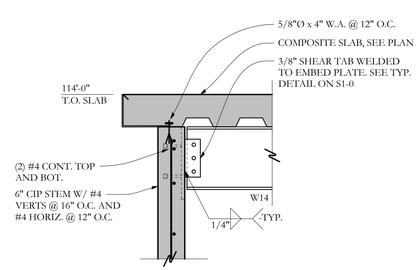

SECTION Y S2-3 3/4"=1'-0

PERMIT DRAWINGS
JULY 3, 2015

STATE OF MAINE
AARON C. JONES
No. 10968
LICENSED
PROFESSIONAL ENGINEER
July 3rd, 2015

Structural Integrity
Consulting Engineers, Inc.
SI # 14-0210

77 Oak Street
Portland, ME, 04101
p. 207-774-4614
f. 866-793-7835
www.structuralinteg.com

BUILD WITH CONFIDENCE

© 2002 Structural Integrity Consulting Engineers, Inc.

© 2015 RYAN SENATORE ARCHITECTURE

APARTMENTS

89 ANDERSON STREET
PORTLAND, MAINE

RSA
RYAN SENATORE ARCHITECTURE
565 CONGRESS STREET
SUITE 304
PORTLAND, MAINE 04101
207-650-6414
senatorearchitecture.com

CONSULTANTS:

STRUCTURAL:
Structural Integrity
77 Oak Street
Portland, ME 04101
207-774-4614

REVISIONS:

DATE:	07/03/2015
PROJECT No.	
DRAWN BY:	BDH
CHECKED BY:	ACJ
SCALE:	AS NOTED

SHEET TITLE:

DETAILS

S2-3