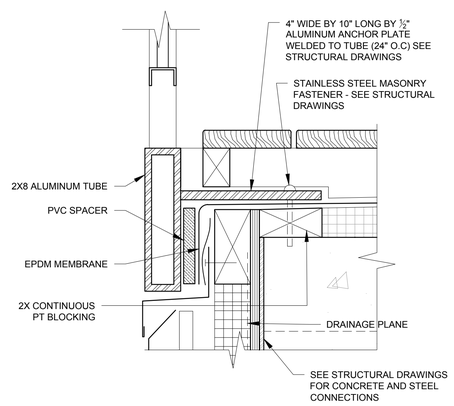

11 SECTION DETAIL AT BUILT-IN BALCONY
3" = 1'-0"

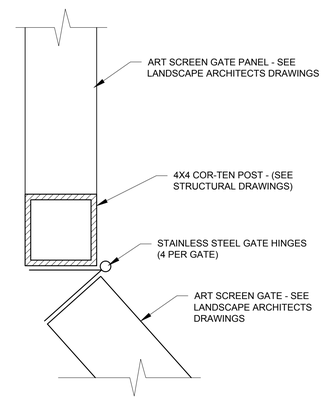

10 PLAN DETAIL AT ACCESS DOOR POST AT FAIR POINT BOX
3" = 1'-0"

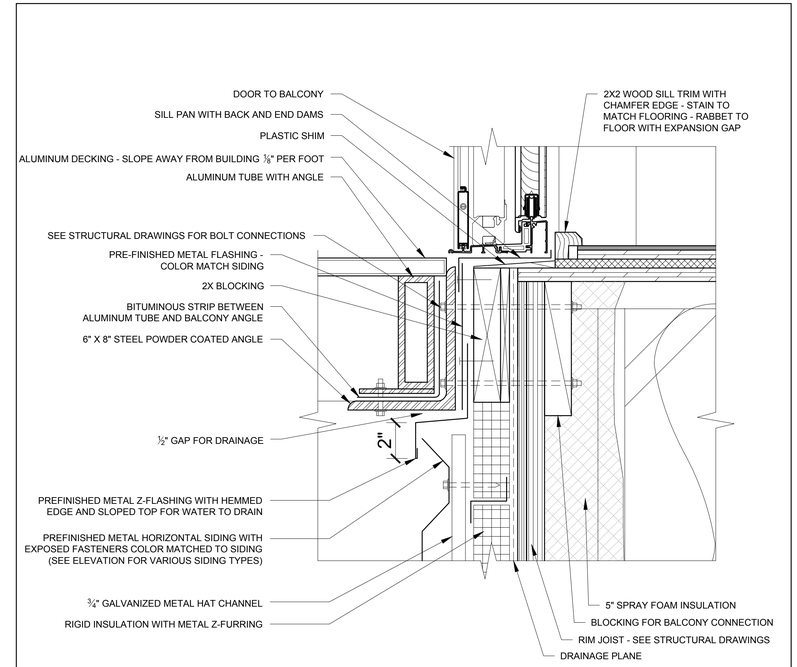

9 SECTION DETAIL AT TYPICAL BALCONY CONNECTION
3" = 1'-0"

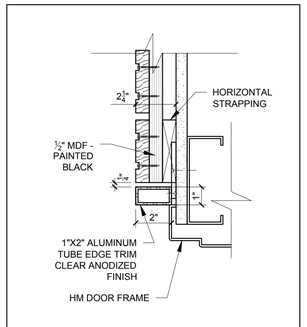

8 SLAT WALL SECTION DETAIL AT DOOR HEAD
3" = 1'-0"

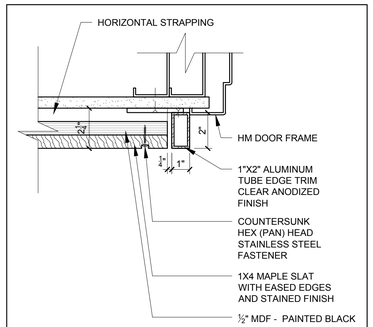

7 SLAT WALL PLAN DETAIL AT DOOR JAMB
3" = 1'-0"

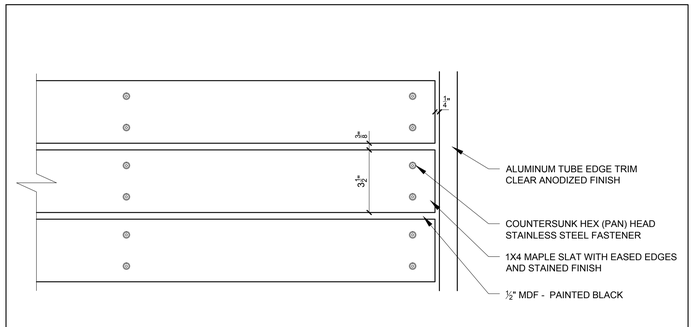

6 SLAT WALL ELEVATION DETAIL AT EDGE TRIM
3" = 1'-0"

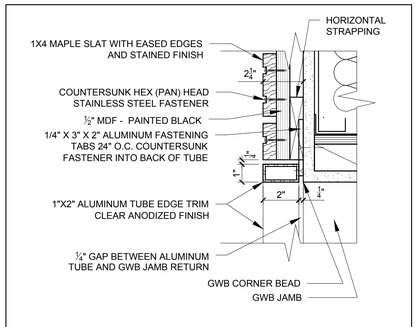

5 SLAT WALL SECTION DETAIL AT WINDOW HEAD
3" = 1'-0"

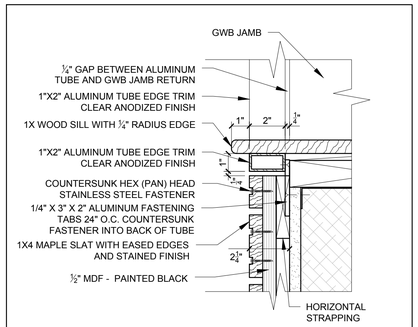

4 SLAT WALL SECTION DETAIL AT WINDOW SILL
3" = 1'-0"

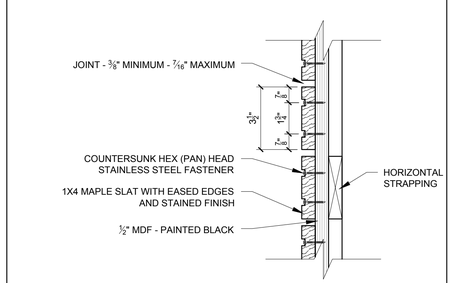

3 SLAT WALL SECTION DETAIL
3" = 1'-0"

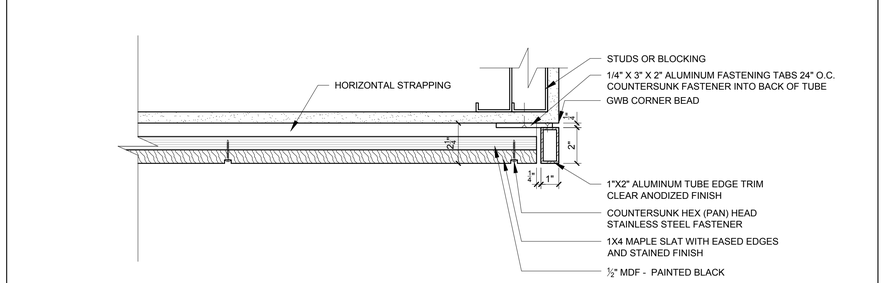

2 SLAT WALL PLAN DETAIL AT DRYWALL RETURN AT ENTRY DOOR
3" = 1'-0"

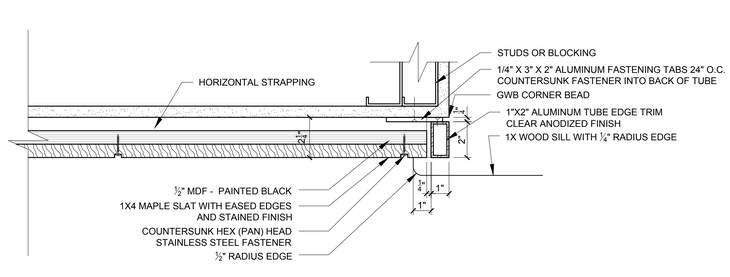

1 SLAT WALL PLAN DETAIL AT DRYWALL RETURN AT WINDOW
3" = 1'-0"

REGISTERED ARCHITECT
RYAN J. SENATORE
No. 3322
STATE OF MAINE

© 2015 RYAN SENATORE ARCHITECTURE

APARTMENTS
89 ANDERSON STREET
PORTLAND, MAINE

RSA
RYAN SENATORE ARCHITECTURE
565 CONGRESS STREET
SUITE 304
PORTLAND, MAINE 04101
207-650-6414
senatorearchitecture.com

CONSULTANTS:

STRUCTURAL:
Structural Integrity
77 Oak Street
Portland, ME 04101
207-774-4614

REVISIONS:

DATE:	JULY 3, 2015
PROJECT No.	1415
DRAWN BY:	RRT / RJS
CHECKED BY:	RJS
SCALE:	AS NOTED

SHEET TITLE:
DETAILS

A5-21