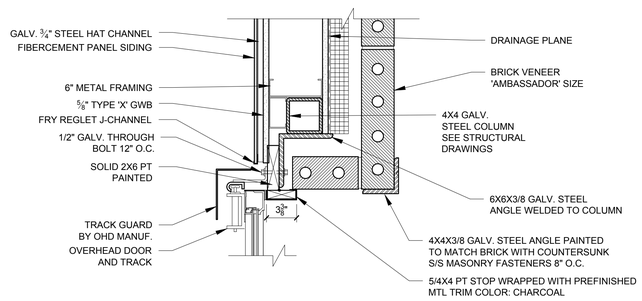

12 PLAN DETAIL AT OVERHEAD DOOR AT PARKING AREA
1 1/2" = 1'-0"

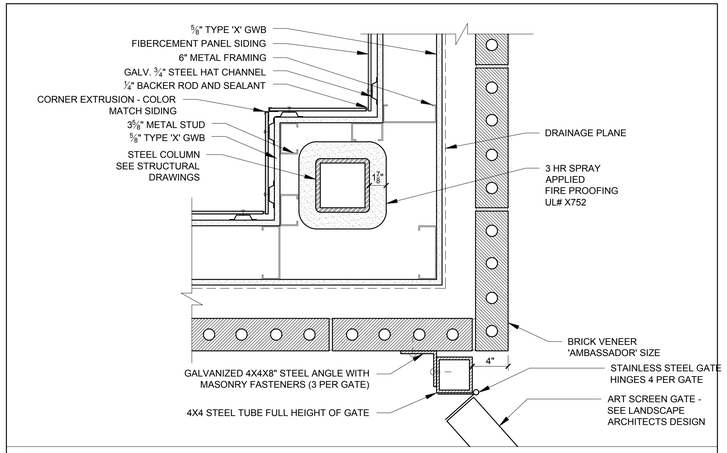

11 PLAN DETAIL AT EXTERIOR WALL BY FAIRPOINT BOX
1 1/2" = 1'-0"

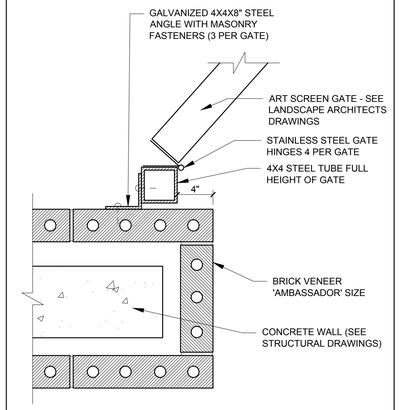

10 PLAN DETAIL AT MASONRY WALL END
1 1/2" = 1'-0"

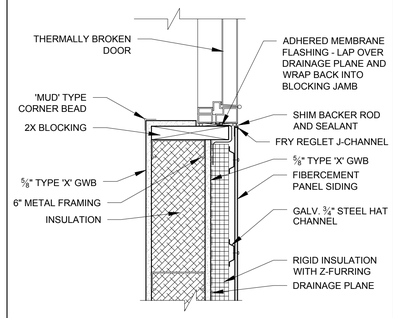

9 PLAN DETAIL AT EXTERIOR DOOR JAMB
1 1/2" = 1'-0"

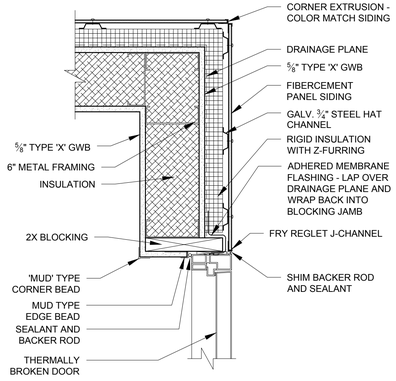

8 PLAN DETAIL AT EXTERIOR DOOR JAMB
1 1/2" = 1'-0"

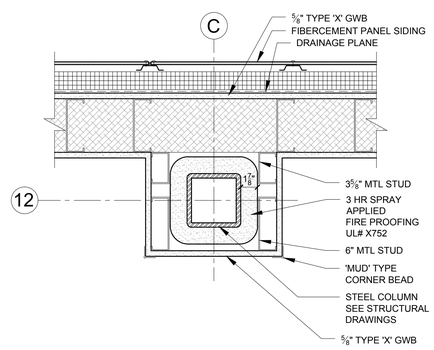

7 PLAN DETAIL AT FIRST FLOOR COLUMN
1 1/2" = 1'-0"

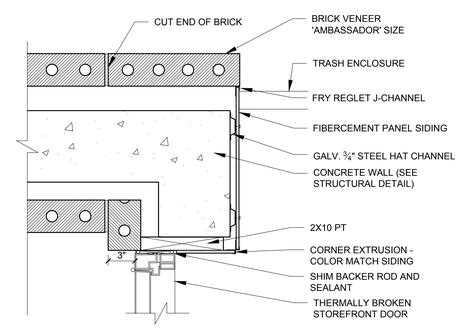

6 PLAN DETAIL AT EXTERIOR DOOR JAMB
1 1/2" = 1'-0"

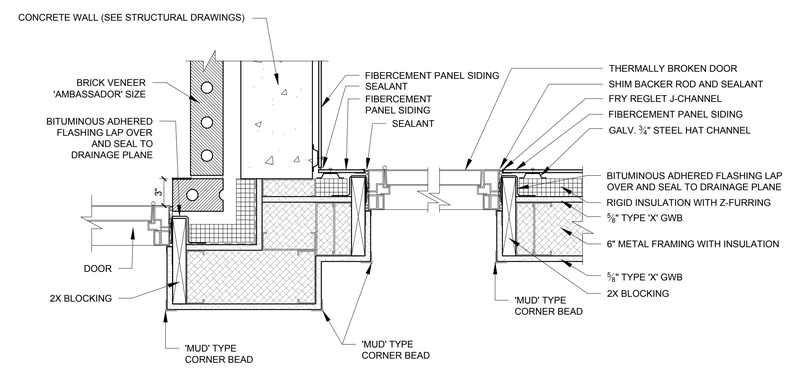

5 PLAN DETAIL AT EXTERIOR DOOR JAMB
1 1/2" = 1'-0"

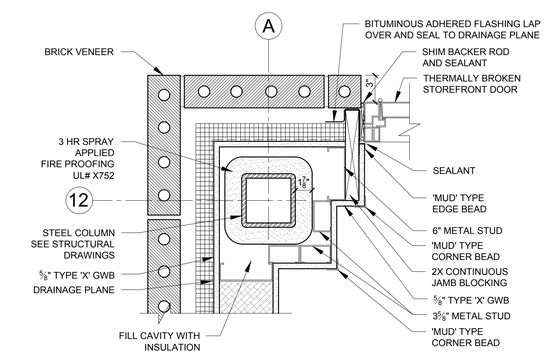

4 PLAN DETAIL AT EXTERIOR DOOR JAMB
1 1/2" = 1'-0"

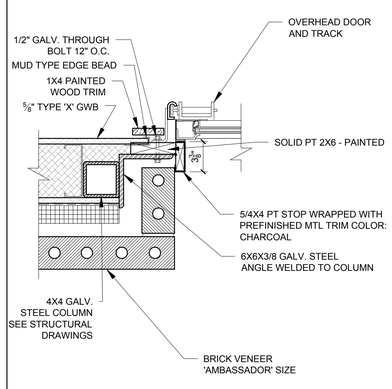

3 PLAN DETAIL AT COMMERCIAL SPACE #1 OVERHEAD DOOR
1 1/2" = 1'-0"

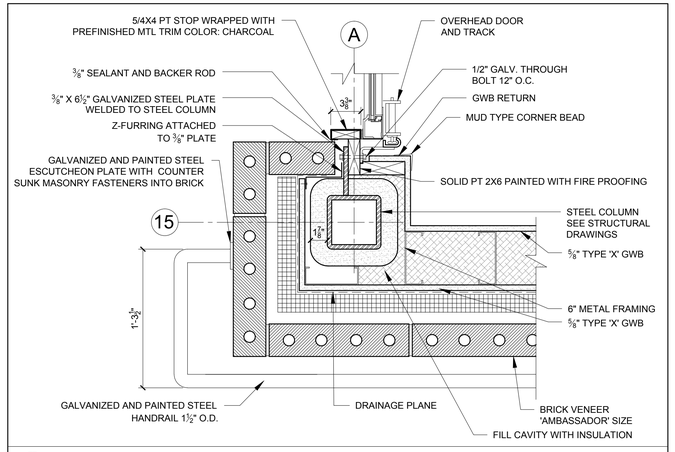

2 PLAN DETAIL OF COLUMN AT COMMERCIAL SPACE #1 ENTRY DOOR
1 1/2" = 1'-0"

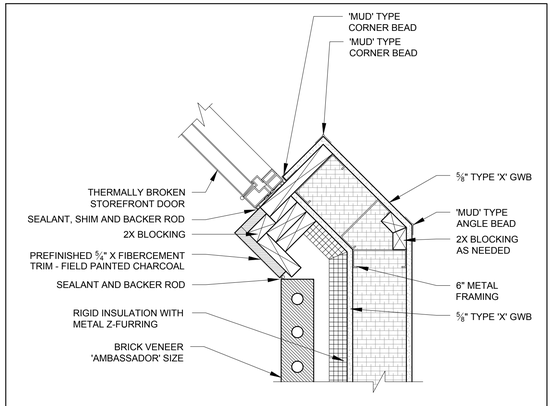

1 PLAN DETAIL AT COMMERCIAL SPACE #1 ENTRY DOOR
1 1/2" = 1'-0"

REGISTERED ARCHITECT
RYAN J. SENATORE
No. 3322
STATE OF MAINE

© 2015 RYAN SENATORE ARCHITECTURE

APARTMENTS
89 ANDERSON STREET
PORTLAND, MAINE

RSA
RYAN SENATORE ARCHITECTURE
565 CONGRESS STREET
SUITE 304
PORTLAND, MAINE 04101
207-650-6414
senatorearchitecture.com

CONSULTANTS:

STRUCTURAL:
Structural Integrity
77 Oak Street
Portland, ME 04101
207-774-4614

REVISIONS:

DATE:	JULY 3, 2015
PROJECT No.	1415
DRAWN BY:	RRT / RJS
CHECKED BY:	RJS
SCALE:	AS NOTED

SHEET TITLE:
DETAILS

A5-16