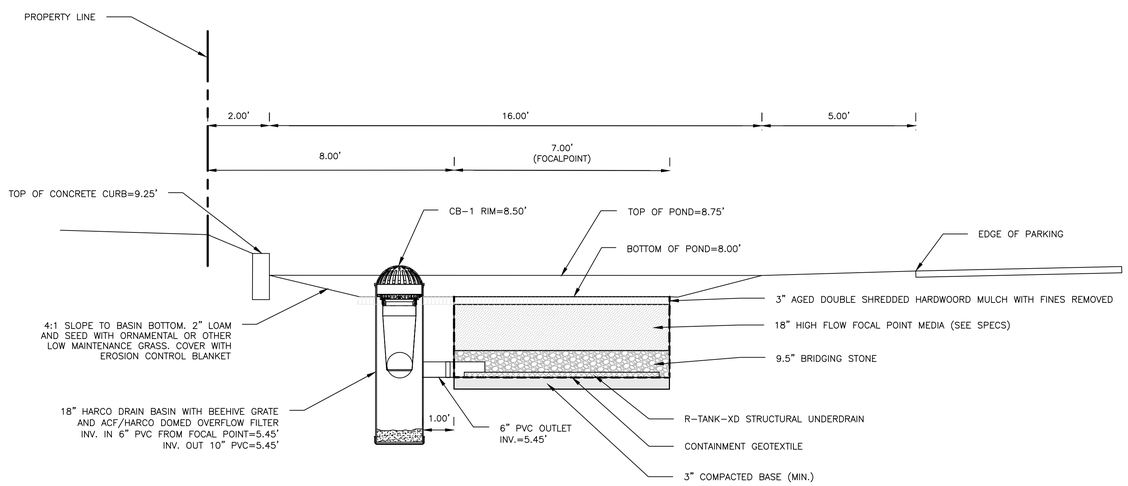

FOCALPOINT SECTION A-A
NOT TO SCALE

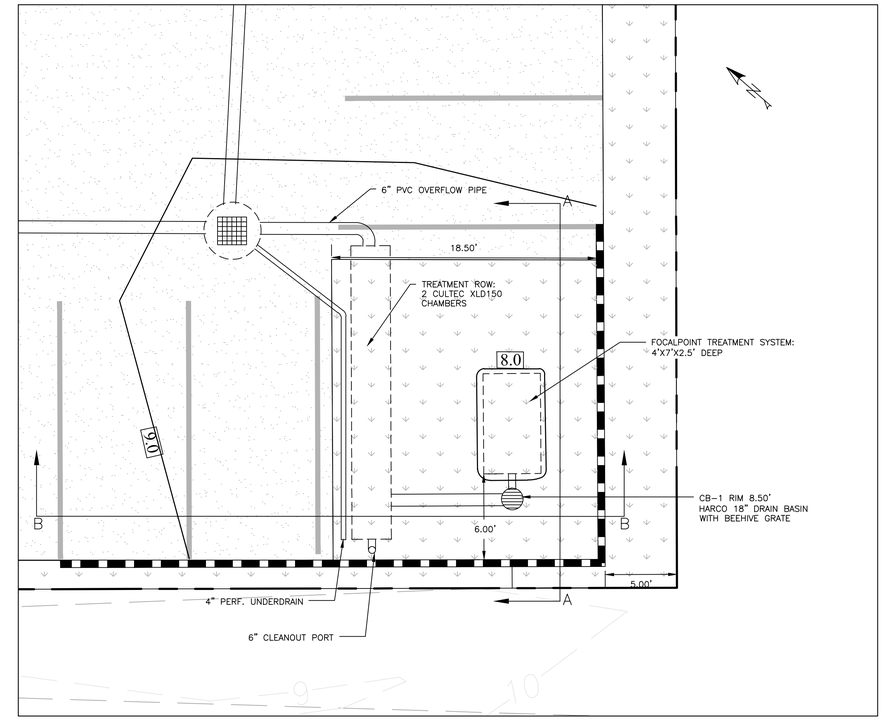

FOCALPOINT LAYOUT
1"=5'

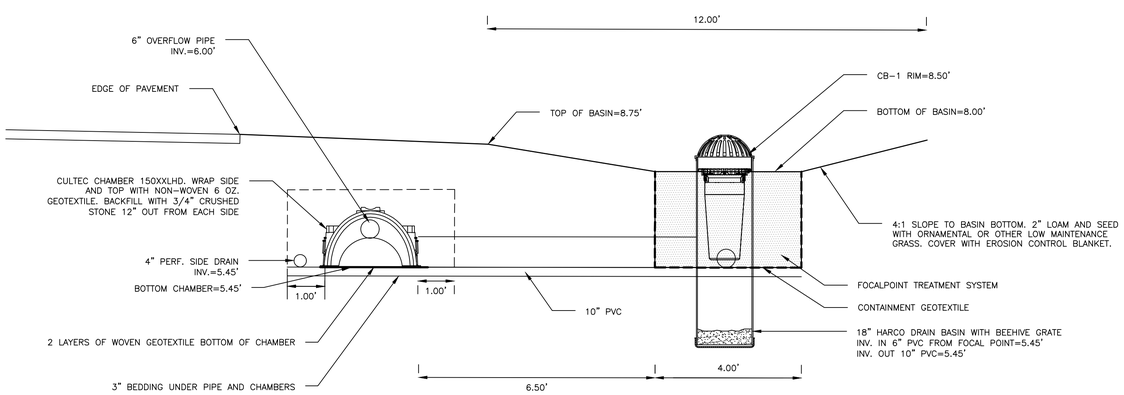

FOCALPOINT SECTION B-B
NOT TO SCALE

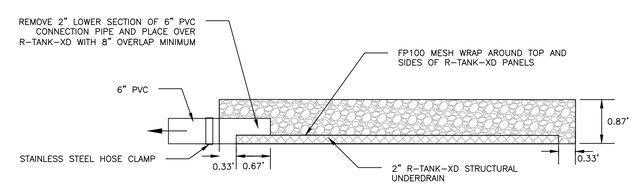

STRUCTURAL UNDERDRAIN DETAIL
NOT TO SCALE

ISSUED FOR CONSTRUCTION

ISSUED FOR	BY	DATE
PRELIM APP.	SWT	5/11/17
CITY REPSONSE	SWT	8/17/17

DRAWING NAME: FOCALPOINT SYSTEM DETAILS

PROJECT NAME: 50 COVE STREET SITE REDEVELOPMENT

CLIENT: RANDOM ORBIT, LLC.
30 DANFORTH STREET, SUITE 213 PORTLAND, ME 04101

ACORN ENGINEERING, INC

THIS PLAN SHALL NOT BE MODIFIED WITHOUT WRITTEN PERMISSION FROM ACORN ENGINEERING INC. ANY ALTERATIONS, AUTHORIZED OR OTHERWISE SHALL BE AT THE USER'S SOLE RISK AND WITHOUT LIABILITY TO ACORN ENGINEERING, INC.

STEPHEN W. TIBBETTS, P.E.
Consulting Civil Engineer
15 Oak Ridge Rd Brunswick, Maine 04011
(207) 725-2667 stibbettspe@gmail.com

FILE:	1083_CIVIL
JN:	1083
SCALE:	NTS
DESIGNED BY:	SWT
DRAWN BY:	SJL
CHECKED BY:	SWT

STATE OF MAINE
STEPHEN W. TIBBETTS
NO. 3314
8/17/17
LICENSED
PROFESSIONAL ENGINEER

DRAWING NO.
C-34