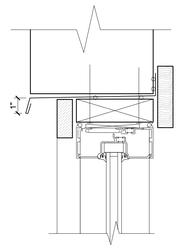

11 SECTION DETAIL AT STORE FRONT WINDOW HEAD
3" = 1'-0"

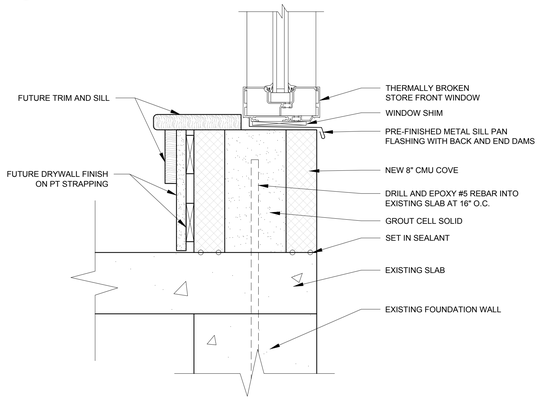

10 SECTION DETAIL AT STORE FRONT WINDOW SILL
3" = 1'-0"

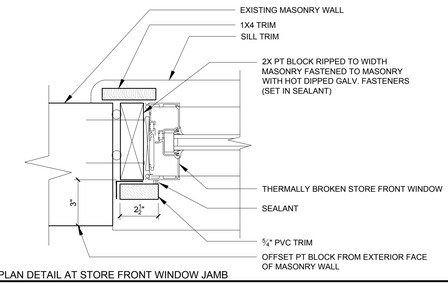

9 PLAN DETAIL AT STORE FRONT WINDOW JAMB
3" = 1'-0"

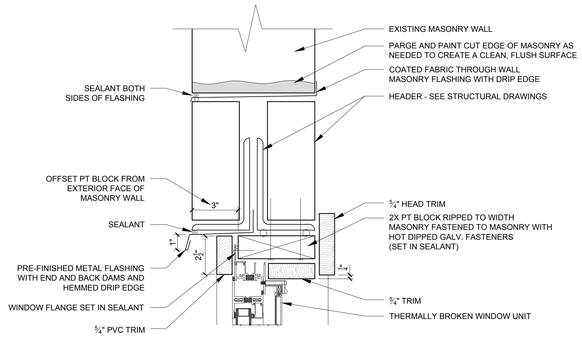

8 SECTION DETAIL AT FLANGED WINDOW HEAD
3" = 1'-0"

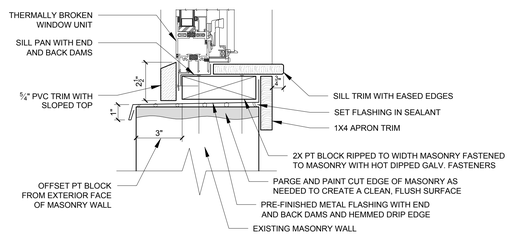

7 SECTION DETAIL AT FLANGED WINDOW SILL
3" = 1'-0"

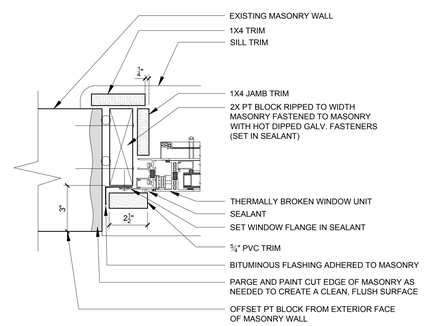

6 PLAN DETAIL AT FLANGED WINDOW JAMB
3" = 1'-0"

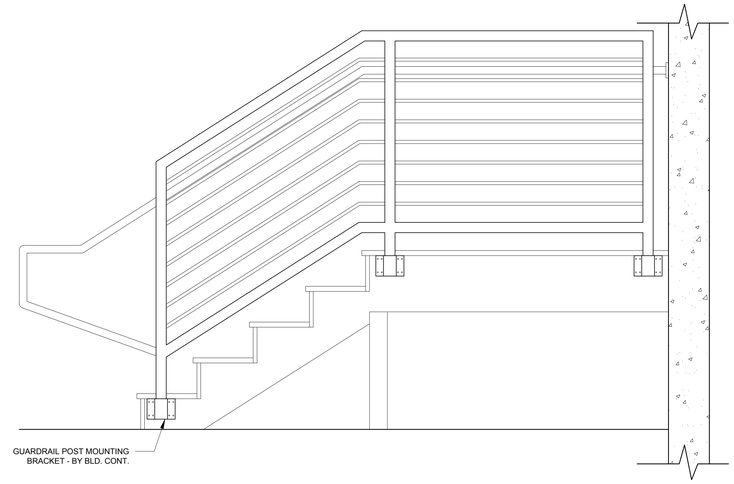

3 ELEVATION OF WOOD FRAMED EXTERIOR LANDING AND STAIR
1" = 1'-0"

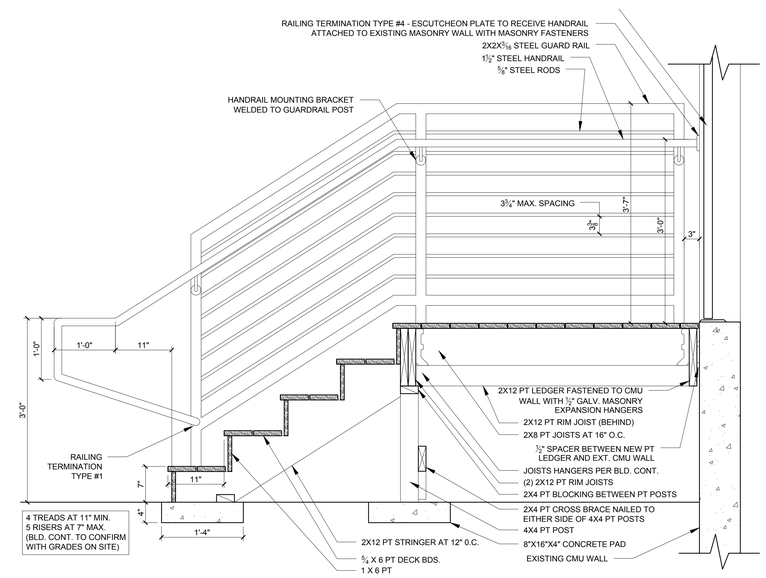

2 SECTION THROUGH WOOD FRAMED EXTERIOR LANDING AND STAIR
1" = 1'-0"

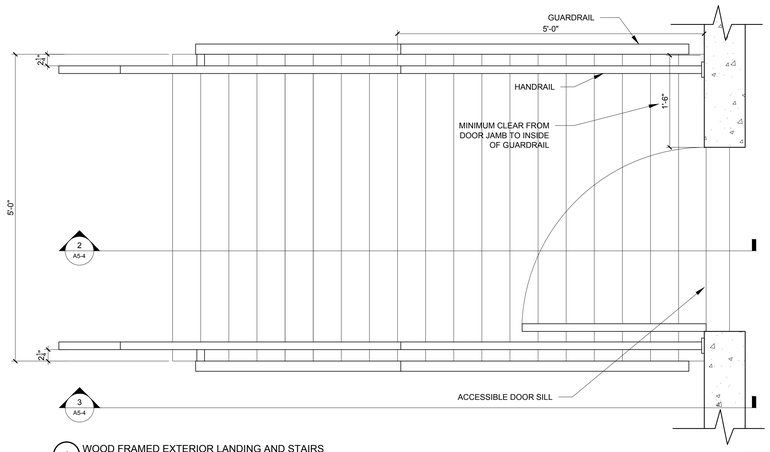

1 WOOD FRAMED EXTERIOR LANDING AND STAIRS
1" = 1'-0"

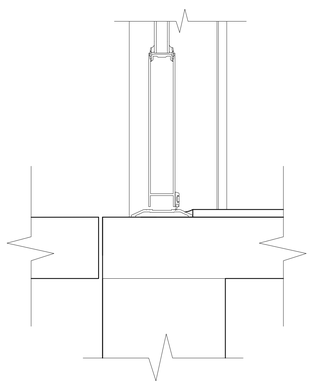

5 SECTION DETAIL OF STORE FRONT DOOR SILL
3" = 1'-0"

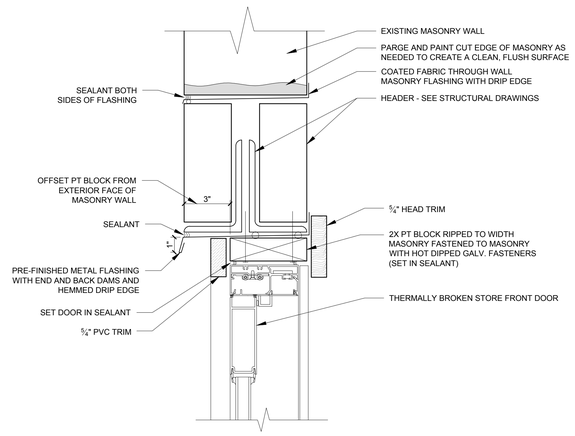

4 SECTION DETAIL OF STORE FRONT DOOR HEAD
3" = 1'-0"

REGISTERED ARCHITECT
RYAN J. SENATORE
No. 3326
STATE OF MAINE

© 2014 RYAN SENATORE ARCHITECTURE

RENOVATIONS TO 170 ANDERSON STREET
PORTLAND, MAINE

RSA
RYAN SENATORE
ARCHITECTURE
565 CONGRESS STREET
SUITE 304
PORTLAND, MAINE 04101
207-650-6414
senatorearchitecture.com

CONSULTANTS:

STRUCTURAL:
Structural Integrity
77 Oak Street
Portland, ME 04101
207-774-4614

REVISIONS:

DATE:	MAY 09, 2014
PROJECT No.	1416
DRAWN BY:	RJS / RRT
CHECKED BY:	RJS
SCALE:	AS NOTED

SHEET TITLE:
DETAILS

A5-4