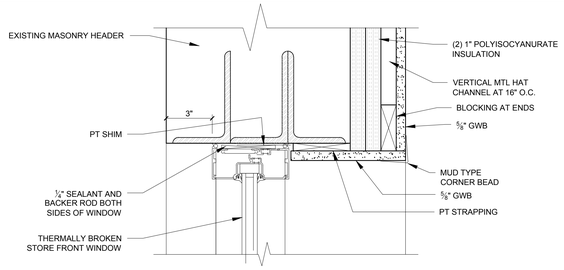

11 SECTION DETAIL AT STORE FRONT WINDOW HEAD
3" = 1'-0"

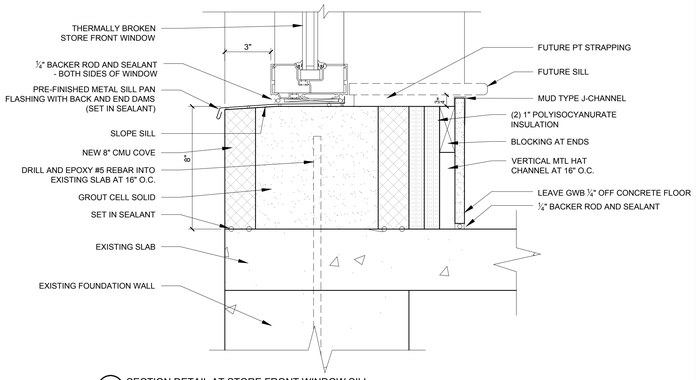

10 SECTION DETAIL AT STORE FRONT WINDOW SILL
3" = 1'-0"

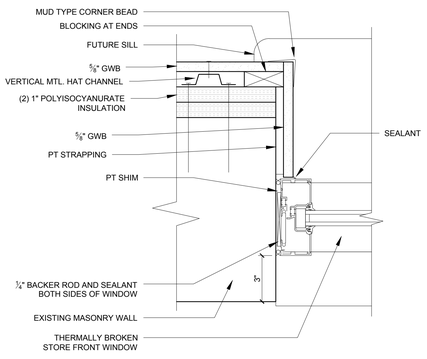

9 PLAN DETAIL AT STORE FRONT WINDOW JAMB
3" = 1'-0"

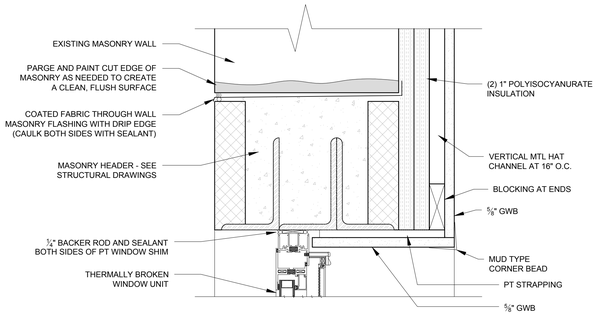

8 SECTION DETAIL AT FLANGED WINDOW HEAD
3" = 1'-0"

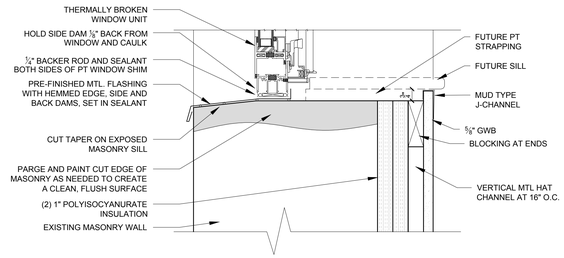

7 SECTION DETAIL AT FLANGED WINDOW SILL
3" = 1'-0"

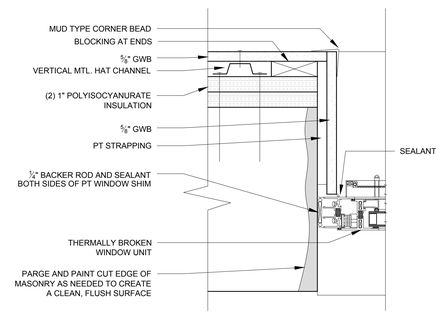

6 PLAN DETAIL AT FLANGED WINDOW JAMB
3" = 1'-0"

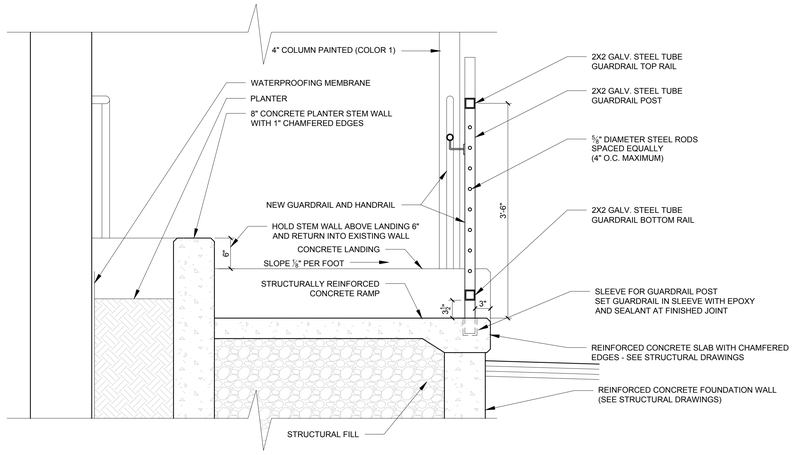

1 SECTION DETAIL OF PLANTER AT CONCRETE RAMP
1" = 1'-0"

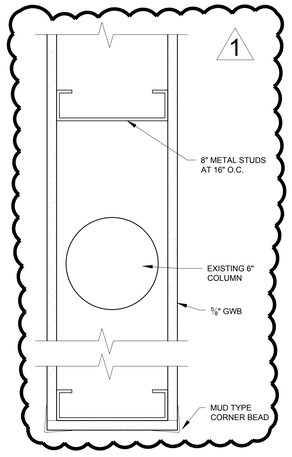

13 COLUMN WRAP
3" = 1'-0"

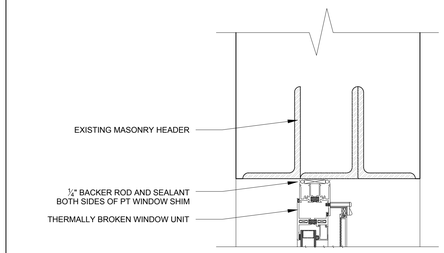

2 SECTION HEAD DETAIL OF WINDOW IN EXISTING OPENING
3" = 1'-0"

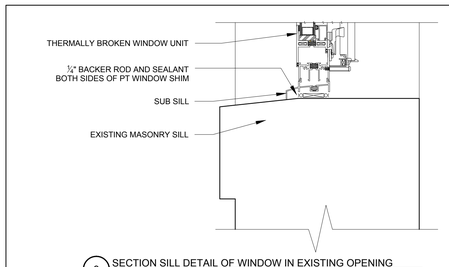

3 SECTION SILL DETAIL OF WINDOW IN EXISTING OPENING
3" = 1'-0"

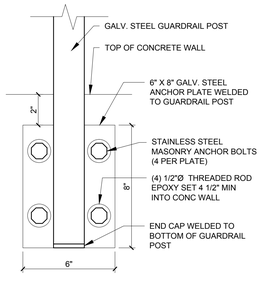

14 GUARDRAIL CONNECTION
3" = 1'-0"

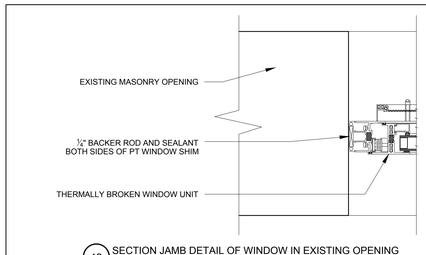

12 SECTION JAMB DETAIL OF WINDOW IN EXISTING OPENING
3" = 1'-0"

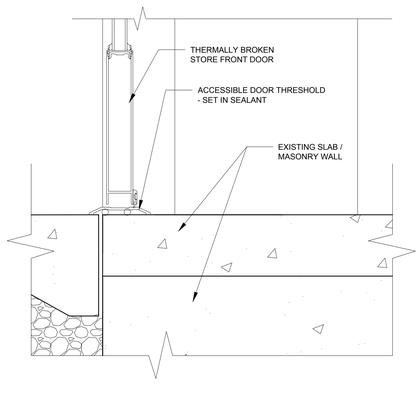

5 SECTION DETAIL OF STORE FRONT DOOR SILL
3" = 1'-0"

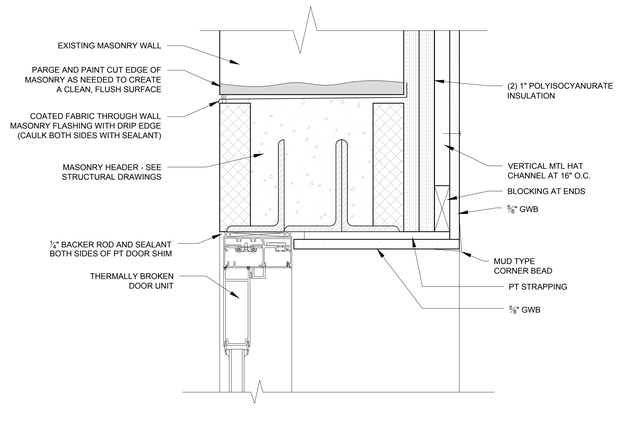

4 SECTION DETAIL OF STORE FRONT DOOR HEAD
3" = 1'-0"

DELETED WOOD STAIRS AND DETAILS FROM PROJECT

2

REGISTERED ARCHITECT
RYAN J. SENATORE
No. 3325
STATE OF MAINE

© 2014 RYAN SENATORE ARCHITECTURE

RENOVATIONS TO 170 ANDERSON STREET
PORTLAND, MAINE

RSA
RYAN SENATORE
ARCHITECTURE
565 CONGRESS STREET
SUITE 304
PORTLAND, MAINE 04101
207-650-6414
senatorearchitecture.com

CONSULTANTS:

STRUCTURAL:
Structural Integrity
77 Oak Street
Portland, ME 04101
207-774-4614

REVISIONS:
1 REVISION #1 - 06/12/14
2 REVISION #2 - 06/30/14

DATE:	JUNE 4, 2014
PROJECT No.	1416
DRAWN BY:	RJS / RRT
CHECKED BY:	RJS
SCALE:	AS NOTED

SHEET TITLE:
DETAILS

A5-4