\\Server\cad\2013\13143\dwg\Details.dwg, 8/20/2014 3:43:14 PM

EROSION AND SEDIMENT CONTROL PLAN

THIS PLAN HAS BEEN DEVELOPED AS A STRATEGY TO CONTROL SOIL EROSION AND SEDIMENTATION DURING AND AFTER CONSTRUCTION. THIS PLAN IS BASED ON THE STANDARDS AND SPECIFICATIONS FOR EROSION PREVENTION IN DEVELOPING AREAS AS CONTAINED IN THE "MAINE EROSION AND SEDIMENT CONTROL BMP'S", DEPARTMENT OF ENVIRONMENTAL PROTECTION DATED MARCH 2003. FOR ADDITIONAL DETAILS AND SPECIFICATIONS SEE BMP'S MANUAL.

THE PROPOSED LOCATIONS OF SILTATION AND EROSION CONTROL STRUCTURES ARE SHOWN ON THE SITE PLAN.

1. ALL SEDIMENT AND EROSION CONTROL MEASURES SHALL BE DONE IN ACCORDANCE WITH THE "MAINE EROSION AND SEDIMENT CONTROL BMP'S", DEPARTMENT OF ENVIRONMENTAL PROTECTION, DATED MARCH 2003.
2. THOSE AREAS UNDERGOING ACTUAL CONSTRUCTION WILL BE LEFT IN AN UNTREATED OR UNVEGETATED CONDITION FOR A MINIMUM TIME. AREAS SHALL BE PERMANENTLY STABILIZED WITHIN 7 DAYS OF FINAL GRADING AND TEMPORARILY STABILIZED WITHIN 7 DAYS OF INITIAL DISTURBANCE OF THE SOIL. IF THE DISTURBANCE IS WITHIN 100 FEET OF A STREAM OR POND, THE AREA SHALL BE STABILIZED WITHIN 2 DAYS OR PRIOR TO ANY STORM EVENT (THIS WOULD INCLUDE WETLANDS).
3. SEDIMENT BARRIERS (EROSION CONTROL MIX, STONE CHECK DAMS, STABILIZED CONSTRUCTION ENTRANCE, ETC.) SHOULD BE INSTALLED PRIOR TO ANY SOIL DISTURBANCE OF THE CONTRIBUTING DRAINAGE AREA ABOVE THEM.
4. INSTALL EROSION CONTROL MIX AT TOE OF SLOPES TO FILTER SILT FROM RUNOFF. SEE E.C. MIX DETAIL FOR PROPER INSTALLATION. EROSION CONTROL MIX WILL REMAIN IN PLACE PER NOTE #5
5. ALL EROSION CONTROL STRUCTURES WILL BE INSPECTED, REPLACED AND/OR REPAIRED EVERY 7 DAYS AND IMMEDIATELY BEFORE AND FOLLOWING ANY SIGNIFICANT RAINFALL (0.5 INCHES) OR SNOW MELT OR WHEN NO LONGER SERVICEABLE DUE TO SEDIMENT ACCUMULATION OR DECOMPOSURE. SEDIMENT DEPOSITS SHOULD BE REMOVED AFTER EACH STORM EVENT. THEY MUST BE REMOVED WHEN DEPOSITS REACH APPROXIMATELY ONE HALF THE HEIGHT OF THE BARRIER. SEDIMENT CONTROL DEVICES SHALL REMAIN IN PLACE AND BE MAINTAINED BY THE CONTRACTOR UNTIL AREAS UPSLOPE ARE STABILIZED BY TURF. EROSION CONTROL MEASURES SHALL BE REMOVED WITHIN 30 DAYS OF PERMANENT STABILIZATION. PERMANENT STABILIZATION IS 90% GRASS CATCH IN VEGETATED AREAS.
6. NO SLOPES, EITHER PERMANENT OR TEMPORARY, SHALL BE STEEPER THAN TWO TO ONE (2 TO 1).
7. IF FINAL SEEDING OF THE DISTURBED AREAS IS NOT COMPLETED 45 DAYS PRIOR TO THE FIRST KILLING FROST, USE TEMPORARY MULCHING (DORMANT SEEDING MAY BE ATTEMPTED AS WELL) TO PROTECT THE SITE AND DELAY SEEDING UNTIL THE NEXT RECOMMENDED SEEDING PERIOD.
8. TEMPORARY SEEDING OF DISTURBED AREAS THAT HAVE NOT BEEN FINAL GRADED SHALL BE COMPLETED BY AUG. 15 OR 45 DAYS PRIOR TO THE FIRST KILLING FROST (OCT. 1) TO PROTECT FROM SPRING RUNOFF PROBLEMS.
9. DURING THE CONSTRUCTION PHASE, INTERCEPTED SEDIMENT WILL BE RETURNED TO THE SITE AND REGRADED ONTO OPEN AREAS. POST SEEDING SEDIMENT, IF ANY WILL BE DISPOSED OF IN AN ACCEPTABLE MANNER.
10. REVEGETATION MEASURES WILL COMMENCE UPON COMPLETION OF CONSTRUCTION EXCEPT AS NOTED ABOVE. ALL DISTURBED AREAS NOT OTHERWISE STABILIZED WILL BE GRADED, SMOOTHED, AND PREPARED FOR FINAL SEEDING AS FOLLOWS:
    a. FOUR INCHES OF LOAM WILL BE SPREAD OVER DISTURBED AREAS AND SMOOTHED TO A UNIFORM SURFACE.
    b. APPLY LIMESTONE AND FERTILIZER ACCORDING TO SOIL TEST. IF SOIL TESTING IS NOT FEASIBLE ON SMALL OR VARIABLE SITES, OR WHERE TIMING IS CRITICAL, FERTILIZER MAY BE APPLIED AT THE RATE OF 800 POUNDS PER ACRE OR 18.4 POUNDS PER 1,000 SQUARE FEET USING 10-20-20 (N-P2O5-K20) OR EQUIVALENT. APPLY GROUND LIMESTONE (EQUIVALENT TO 50% CALCIUM PLUS MAGNESIUM OXIDE) AT A RATE OF 3 TONS PER ACRE (138 LB PER 1,000 SQ. FT.).
    c. FOLLOWING SEED BED PREPARATION, DITCHES AND BACK SLOPES WILL BE SEEDED TO A MIXTURE OF 47% CREEPING RED FESCUE, 5% REDTOP, AND 48% TALL FESCUE. THE LAWN AREAS WILL BE SEEDED TO A PREMIUM TURF MIXTURE OF 44% KENTUCKY BLUEGRASS, 44% CREEPING RED FESCUE, AND 12% PERENNIAL RYEGRASS. SEEDING RATE IS 1.03 LBS PER 1000 SQ. FT. LAWN QUALITY SOD MAY BE SUBSTITUTED FOR SEED. SEED MIX SHALL CONTAIN 10% ANNUAL RYE GRASS.
    d. HAY MULCH AT THE RATE OF 70-90 LBS PER 1000 SQUARE FEET OR A HYDRO-APPLICATION OF ASPHALT, WOOD OR PAPER FIBER SHALL BE APPLIED FOLLOWING SEEDING. A SUITABLE BINDER SUCH AS CURASOL OR RMB PLUS WILL BE USED ON HAY MULCH FOR WIND CONTROL.
11. ALL TEMPORARY EROSION CONTROL MEASURES SHALL BE REMOVED WITHIN 30 DAYS ONCE THE SITE IS STABILIZED WITH 90% GRASS CATCH IN VEGETATED AREAS. TEMPORARY EROSION AND SEDIMENT CONTROL BLANKET SHALL BE USED IN ALL DITCHES AND SWALES AS SHOWN IN DETAILS.
12. WETLANDS WILL BE PROTECTED WITH EROSION CONTROL MIX OR SILT FENCE INSTALLED AT THE EDGE OF THE WETLAND OR THE BOUNDARY OF WETLAND DISTURBANCE.

MULCH AND MULCH ANCHORING

MULCH

LOCATION	MULCH	RATE (1000 S.F.)
PROTECTED AREA	STRAW OR HAY *	100 POUNDS
WINDY AREAS	SHREDDED OR CHOPPED CORNSTALKS	185-275 POUNDS
	STRAW OR HAY (ANCHORED) *	100 POUNDS
MODERATE TO HIGH VELOCITY AREAS OR STEEP SLOPES (GREATER THAN OR EQUAL TO 3:1)	JUTE MESH OR EXCELSIOR MAT	AS REQUIRED AS REQUIRED

(GREATER THAN OR EQUAL TO 3:1)

* A HYDRO-APPLICATION OF ASPHALT, WOOD, OR PAPER FIBER MAY BE APPLIED FOLLOWING SEEDING. A SUITABLE BINDER SUCH AS CURASOL OR RMB PLUS SHALL BE USED ON HAY MULCH FOR WIND CONTROL.

MULCH ANCHORING

ANCHOR MULCH WITH PEG AND TWINE (1 SQ. YD./BLOCK); MULCH NETTING (AS PER MANUFACTURED; ASPHALT EMULSION (0.04 GALLONS PER SQ. YD.); LIQUID ASPHALT (0.10 GALLONS PER SQ. YD.); WOOD CELLULOSE FIBER (750 LBS/ACRE); CHEMICAL TACK (AS PER MANUFACTURERS SPECIFICATIONS); USE OF A SERRATED STRAIGHT DISK. WETTING FOR SMALL AREAS AND ROAD DITCHES MAY BE PERMITTED.

Additional temporary seed mixture (for periods less than 12 months).

Season	Seed	Rate
Summer (5/15 – 8/15)	Sudangrass Oats	40 lbs/acre 80 lbs/acre
Late Summer/Early Fall (8/15 – 9/15)	Prennial Ryegrass	40 lbs/acre
Fall (9/15 – 11/1) Winter (11/1 – 4/1)	Winter Rye Mulch w/ Dormant Seed	112 lbs/acre 80 lbs/acre*
Spring (4/1 – 7/1)	Oats Annual Ryegrass	80 lbs/acre 40 lbs/acre

*Seed Rate Only

EROSION CONTROL DURING CONSTRUCTION

WINTER CONSTRUCTION

1. WINTER CONSTRUCTION PERIOD: OCTOBER 1 THROUGH APRIL 15
2. WINTER EXCAVATION AND EARTHWORK SHALL BE DONE SUCH THAT NO MORE THAN 1 ACRES OF THE SITE IS WITHOUT STABILIZATION AT ANY ONE TIME.
3. EXPOSED AREA SHOULD BE LIMITED TO THAT WHICH CAN BE MULCHED IN ONE DAY PRIOR TO ANY SNOW EVENT.
4. CONTINUATION OF EARTHWORK OPERATIONS ON ADDITIONAL AREAS SHALL NOT BEGIN UNTIL THE EXPOSED SOIL SURFACE ON THE AREA BEING WORKED HAS BEEN STABILIZED SUCH THAT NO MORE THAN ONE ACRE OF THE SITE IS WITHOUT EROSION CONTROL PROTECTION.
5. OVERWINTER STABILIZATION OF DITCHES AND CHANNELS:
ALL STONE-LINED DITCHES AND CHANNELS MUST BE CONSTRUCTED AND STABILIZED BY NOVEMBER 15. ALL GRASS LINED DITCHES AND CHANNELS MUST BE CONSTRUCTED AND STABILIZED BY SEPTEMBER 1. IF A DITCH OR CHANNEL IS NOT GRASS-LINED BY SEPTEMBER 1, THEN ONE OF THE FOLLOWING ACTIONS MUST BE TAKEN TO STABILIZE THE DITCH FOR LATE FALL AND WINTER.
    A. INSTALL A SOD LINING IN THE DITCH:
    A DITCH MUST BE LINED WITH PROPERLY INSTALLED SOD BY OCTOBER 1. PROPER INSTALLATION INCLUDES: PINNING THE SOD ONTO THE SOIL WITH WIRE PINS, ROLLING THE SOD TO GUARANTEE CONTACT BETWEEN THE SOD AND UNDERLYING SOIL, WATERING THE SOD TO PROMOTE ROOT GROWTH INTO THE DISTURBED SOIL, AND ANCHORING SOD AT THE BASE OF THE DITCH WITH JUTE OR PLASTIC MESH TO PREVENT THE SOD FROM SLOUGHING DURING FLOW CONDITIONS. SEE THE PERMANENT VEGETATION BMP SECTION.
    B. INSTALL A STONE LINING IN THE DITCH:
    A DITCH MUST BE LINED WITH STONE RIPRAP BY NOVEMBER 15. A REGISTERED PROFESSIONAL ENGINEER MUST BE HIRED TO DETERMINE THE STONE SIZE AND LINING THICKNESS NEEDED TO WITHSTAND THE ANTICIPATED FLOW VELOCITIES AND FLOW DEPTHS WITHIN THE DITCH. IF NECESSARY, THE CONTRACTOR WILL REGRADE THE DITCH PRIOR TO PLACING THE STONE LINING SO TO PREVENT THE STONE LINING FROM REDUCING THE DITCH'S CROSS-SECTIONAL AREA.
6. OVERWINTER STABILIZATION OF DISTURBED SLOPES:
ALL STONE-COVERED SLOPES MUST BE CONSTRUCTED AND STABILIZED BY NOVEMBER 15. ALL SLOPES TO BE VEGETATED MUST BE SEEDED AND MULCHED BY SEPTEMBER 1. THE DEPARTMENT WILL CONSIDER ANY AREA HAVING A GRADE GREATER THAN 15% TO BE A SLOPE. IF A SLOPE TO BE VEGETATED IS NOT STABILIZED BY SEPTEMBER 1, THEN ONE OF THE FOLLOWING ACTIONS MUST BE TAKEN TO STABILIZE THE SLOPE FOR LATE FALL AND WINTER. STABILIZE THE SOIL WITH TEMPORARY VEGATATION AND EROSION CONTROL MATS. BY OCTOBER 1 THE DISTURBED SLOPE MUST BE SEEDED WITH WINTER RYE AT A SEEDING RATE OF 3 POUNDS PER 1000 SQUARE FEET AND THEN INSTALL EROSION CONTROL MATS OR ANCHORED MULCH OVER THE SEEDING. IF THE RYE FAILS TO GROW AT LEAST THREE INCHES OR FAILS TO COVER AT LEAST 75% OF THE SLOPE BY NOVEMBER 1, THEN THE CONTRACTOR WILL COVER THE SLOPE WITH A LAYER OF EROSION CONTROL MIX OR WITH STONE RIPRAP AS DESCRIBED IN THE FOLLOWING STANDARDS.
    A. STABILIZE THE SOIL WITH SOD:
    THE DISTURBED SLOPE MUST BE STABILIZED WITH PROPERLY INSTALLED SOD BY OCTOBER 1. PROPER INSTALLATION INCLUDES THE CONTRACTOR PINNING THE SOD ONTO THE SLOPE WITH WIRE PINS, ROLLING THE SOD TO GUARANTEE CONTACT BETWEEN THE SOD AND UNDERLYING SOIL, AND WATERING THE SOD TO PROMOTE ROOT GROWTH INTO THE DISTURBED SOIL. THE CONTRACTOR WILL NOT USE LATE SEASON SOD INSTALLATION TO STABILIZE SLOPES HAVING A GRADE GREATER THAN 33% (3H:1V) OR HAVING GROUNDWATER SEEPS ON THE SLOPE FACE.
    B. STABILIZE THE SOIL WITH EROSION CONTROL MIX:
    EROSION CONTROL MIX MUST BE PROPERLY INSTALLED BY NOVEMBER 15. THE CONTRACTOR WILL NOT USE EROSION CONTROL MIX TO STABILIZE SLOPES HAVING GREATER THAN 50% (2H:1V) OR HAVING GROUNDWATER SEEPS ON THE SLOPE FACE. SEE THE TEMPORARY MULCHING BMP SECTION.
    C. STABILIZE THE SOIL WITH STONE RIPRAP:
    PLACE A LAYER OF STONE RIPRAP ON THE SLOPE BY NOVEMBER 15. THE DEVELOPMENT'S OWNER WILL HIRE A REGISTERED PROFESSIONAL ENGINEER TO DETERMINE THE STONE SIZE NEEDED FOR STABILITY ON THE SLOPE AND TO DESIGN A FILTER LAYER FOR UNDERNEATH THE RIPRAP. SEE THE RIPRAP SLOPE STABILLIZATION BMP SECTION.
7. OVERWINTER STABILIZATION OF DISTURBED SOILS:
BY SEPTEMBER 15, ALL DISTURBED SOILS ON AREAS HAVING A SLOPE LESS THAN 15% MUST BE SEEDED AND MULCHED. IF THE DISTURBED AREAS ARE NOT STABILIZED BY THIS DATE, THEN ONE OF THE FOLLOWING ACTIONS MUST BE TAKEN TO STABILIZE THE SOIL FOR LATE FALL AND WINTER.
    A. STABILIZE THE SOIL WITH TEMPORARY VEGETATION:
    BY OCTOBER 1, SEED THE DISTURBED SOIL WITH WINTER RYE AT A SEEDING RATE OF 3 POUNDS PER 1000 SQUARE FEET, LIGHTLY MULCH THE SEEDED SOIL WITH HAY OR STRAW AT 75 POUNDS PER 1000 SQUARE FEET, AND ANCHOR THE MULCH WITH PLASTIC NETTING. MONITOR GROWTH OF THE RYE OVER THE NEXT 30 DAYS. IF THE RYE FAILS TO GROW AT LEAST THREE INCHES OR FAILS TO COVER AT LEAST 75% OF THE DISTURBED SOILD BEFORE NOVEMBER 1, THEN MULCH THE AREA FOR OVER-WINTER PROTECTION AS DESCRIBED BELOW.
    B. STABILIZE THE SOIL WITH SOD:
    STABILIZE THE DISTURBED SOIL WITH PROPERLY INSTALLED SOD BY OCTOBER 1. PROPER INSTALLATION INCLUDES PINNING THE SOD ONTO THE SOIL WITH WIRE PINS, ROLLINIG THE SOD TO GUARANTEE CONTACT BETWEEN THE SOD AND UNDERLYING SOIL, AND WATERING THE SOD TO PROMOTE ROOT GROWTH INTO THE DISTURBED SOIL.
    C. STABILIZE THE SOIL WITH MULCH:
    BY NOVEMBER 15, MULCH THE DISTURBED SOIL BY SPREADING HAY OR STRAW AT A RATE OF AT LEAST 150 POUNDS PER 1000 SQUARE FEET ON THE AREA SO THAT NO SOIL IS VISIBLE THROUGH THE MULCH. IMMEDIATELY AFTER APPLYING THE MULCH, ANCHOR THE MULCH WITH PLASTIC NETTING TO PREVENT WIND FROM MOVING THE MULCH OFF THE DISTURBED SOIL.
8. MAINTENANCE:
MAINTENANCE MEASURES SHALL BE APPLIED AS NEEDED DURING THE ENTIRE CONSTRUCTION SEASON. AFTER EACH RAINFALL, SNOW STORM OR PERIOD OF THAWING AND RUNOFF, THE SITE CONTRACTOR SHALL PERFORM A VISUAL INSPECTION OF ALL INSTALLED EROSION CONTROL MEASURES AND PERFORM REPAIRS AS NEEDED TO INSURE THEIR CONTINUOUS FUNCTION. FOLLOWING THE TEMPORARY AND/OR FINAL SEEDING AND MULCHING, THE CONTRACTOR SHALL, IN THE SPRING, INSPECT AND REPAIR ANY DAMAGES AND/OR BARE SPOTS. AN ESTABLISHED VEGETATIVE COVER MEANS A MINIMUM OF 85 TO 90% OF AREAS VEGETATED WITH VIGOROUS GROWTH.

STABILIZATION SCHEDULE BEFORE WINTER:

SEPTEMBER 15	ALL DISTURBED AREAS MUST BE SEEDED AND MULCHED. ALL SLOPES MUST BE STABILIZED, SEEDED AND MULCHED. ALL GRASS LINED DITCHES AND CHANNELS MUST BE STABILIZED WITH MULCH OR AN EROSION CONTROL BLANKET
OCTOBER 1	IF THE SLOPE IS STABILIZED WITH AN EROSION CONTROL BLANKET AND SEEDED. ALL DISTURBED AREAS TO BE PROTECTED WITH AN ANNUAL GRASS MUST BE SEEDED AT A SEEDING RATE OF 3 POUNDS PER 1000 SQUARE FEET AND MULCHED.
NOVEMBER 15	ALL STONE LINED DITCHES AND CHANNELS MUST BE CONSTRUCTED AND STABILIZED. SLOPES THAT ARE COVERED WITH RIPRAP MUST BE CONSTRUCTED BY THAT DATE.

9. DURING WINTER CONSTRUCTION PERIOD ALL SNOW SHALL BE REMOVED FROM AREAS OF SEEDING AND MULCHING PRIOR TO PLACEMENT.
10. AREAS WITHIN 100 FEET OF STREAMS THAT ARE NOT STABILIZED WITH VEGETATION BY DEC. 1 SHALL BE MULCHED AND ANCHORED WITH NETTING. IF WORK CONTINUES IN THIS AREA DURING THE WINTER, A DOUBLE LINE OF SEDIMENT BARRIERS MUST BE USED.

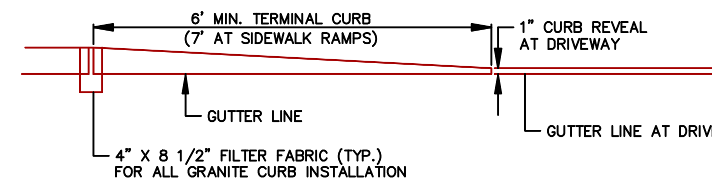

TERMINAL CURB PROFILE

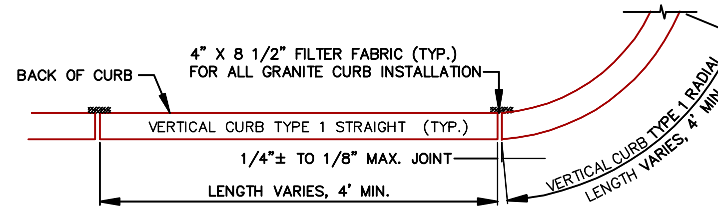

VERTICAL GRANITE CURB PLAN VIEW

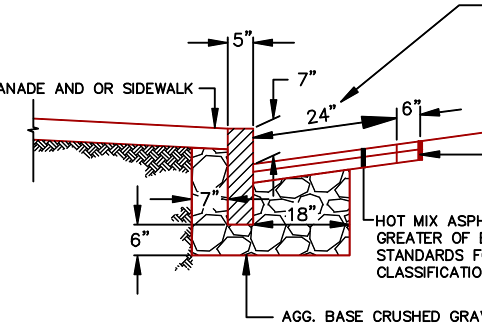

VERTICAL GRANITE CURB CROSS SECTION

VERTICAL GRANITE CURB
INSTALLATION IN EXISTING STREETS

NOT TO SCALE

PLACE BARRIER ALONG RELATIVELY LEVEL CONTOUR.
REMOVE TALL GRASSES OR WOODY VEGETATION TO AVOID CREATING VOIDS.
SEE MAINE EROSION AND SEDIMENT CONTROL BMP FOR COMPOSITION AND PLACEMENT.

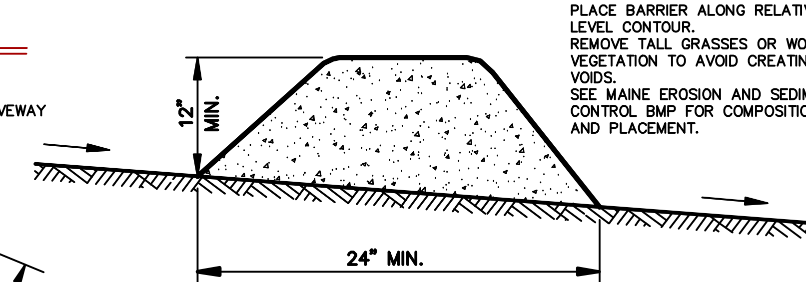

EROSION CONTROL MIX BERM

NTS

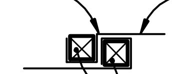

END POST DETAIL

NTS

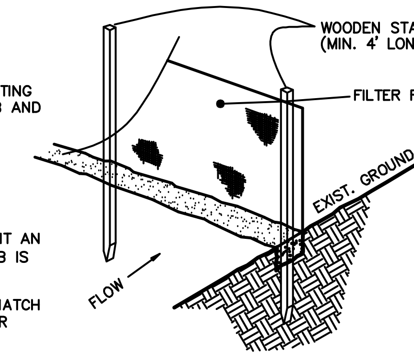

1. KEY FABRIC IN A 4"X4" TRENCH W/ BACKFILL.
2. SILT FENCE SHALL BE A 3' FENCE OF 120LB/M (W/ REINF. BACK OF 6" WIRE MESH, POSTS 10' O.C.) OR 200LB/M (W/ NO REINF. POSTS 6' O.C.)
3. INSTALL PER CUMBERLAND COUNTY S.W.C.D. STANDARDS

SILT FENCE DETAIL

N.T.S.

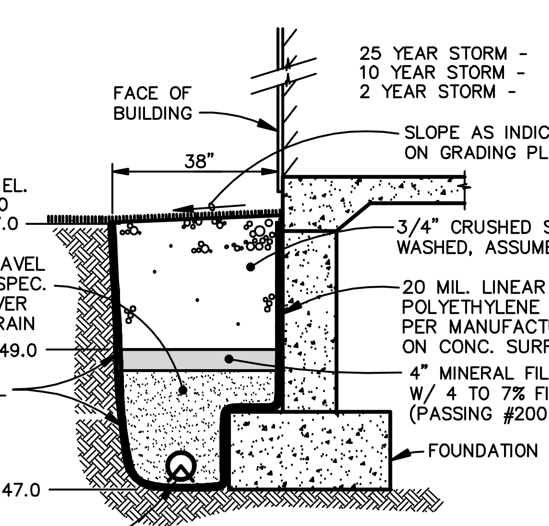

ROOF LINE DRIP EDGE TREATMENT

N.T.S.

NOTES:

Trench width shown i$ payment width for rockexcavation & replacement of unsuitable material.

2. Do not mechanically compact directly over flexible pipe (e.g. PVC, Poltyethylene)
3. Concrete pipe shall have sand bedding.
4. Perforations along invert required on storm drain pipes per AASHO standards.

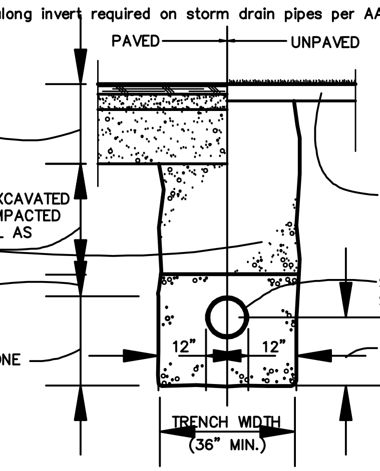

TRENCH DETAIL

NTS

BERM STONE SIZE

SIEVE DISIGNATION METRIC	SIEVE DISIGNATION US CUSTOMARY	% BY WEIGHT PASSING SQUARE MESH SIEVES
300 MM	12"	100
150 MM	6"	84–100
75 MM	3"	68–83
25.4 MM	1"	42–55
4.75 MM	NO. 4	8–12

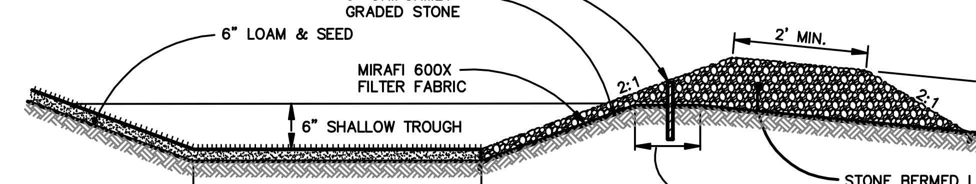

SECTION

CONSTRUCTION SPECIFICATIONS:

1. SPREADERS SHALL BE INSTALLED WITH A LEVEL INSTRUMENT. CONSTRUCT LEVEL LIP TO 0% GRADE TO ENSURE UNIFORM SHEET FLOWLEVEL SPREADER SHALL BE CONSTRUCTED ON UNDISTURBED SOIL, NOT FILL.
2. SELECTED GEOTEXTILE FABRIC BASED ON UNDISTURBED SOILS (SANDS, SILTS, CLAYS, ETC.).
3. PLACE UNIFORMLY GRADED STONE (SEE TABLE 5-3).
4. THE INLET DITCH SHALL NOT EXCEED A 1% GRADE FOR AT LEAST 20 FEET BEFORE ENTERING THE SPREADER.
5. STORM RUN-OFF CONVERTED TO SHEET FLOW ACROSS OUTLET APRON SHALL FLOW ONTO STABILIZED AREAS. AREAS. RUNOFF SHALL NOT BE RECONCENTRATED IMMEDIATELY BELOW THE POINT OF DISCHARGE.
6. PERIODIC INSPECTION AND REQUIRED MAINTENANCE SHALL BE PROVIDED.
7. CONSTRUCTION OF LEVEL LIP SPREADER SHALL BE FROM UPHILL SIDE ONLY. LEVEL LIP AND AREA BELOW SPREADER SHALL BE AT EXISTING GRADES AND UNDISTURBED BY EARTHWORK OR EQUIPMENT EXCEPT AS NOTED ON PLAN.
8. CONSTRUCT SPREADER WITH LIP AT EXISTING ELEVATION AS SPECIFIED.
9. DOWN GRADIANT AND RECEIVING AREA MUST BE NATURALLY WELL VEGETATED.
10. DISCHARGE NOT PERMITTED WITHIN 25' OF A STREAM OR WETLAND, CONSULT DEP IF STRUCTURE MUST BE WITHIN 75' OF SSTREAM OR WATER BODY.

LEVEL LIP SPREADER

NTS

REVISION		
NO.	DATE	DESCRIPTION
1	3/7/14	Revised Per City of Portland Comments
2	4/11/14	Revised Per City of Portland Comments
3	5/28/14	Revised Per Glenn Morse Site Improvements
4	8/20/14	Revised Per City Comments

STATE OF MAINE
ANDREW S. MORRELL
No. 13285
LICENSED
PROFESSIONAL ENGINEER

BH2M
Berry, Huff, McDonald, Milligan Inc.
Engineers, Surveyors
Tel. (207) 839-2771

FOR:
Melinda Schott
3 Red Mill Way
Cumberland, Maine 04021
And
Glenn Morse
218 Washington Avenue, Suite 1

DETAILS

LOT DIVISION & DEVELOPMENT OF REMAINING LAND

218 WASHINGTON AVENUE

DESIGNED	DATE
TSL	FEB 20
DRAWN	SCALE
TSL	NTS
CHECKED	JOB. N
AM	13143 & 14

SHEET
2