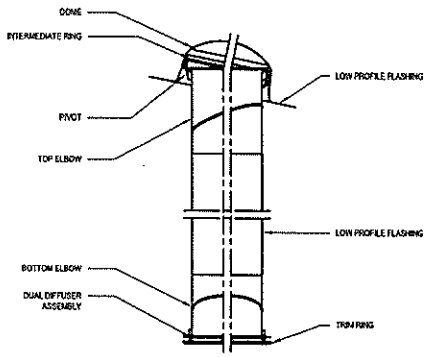

1 VELUX SUN TUBE FLASHING DETAIL
1" = 1'-0"

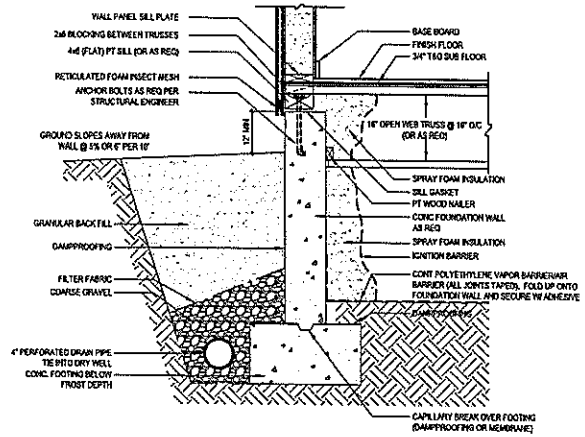

2 CONDITIONED CRAWL SPACE *(ALTERNATE DETAIL)*
1" = 1'-0"

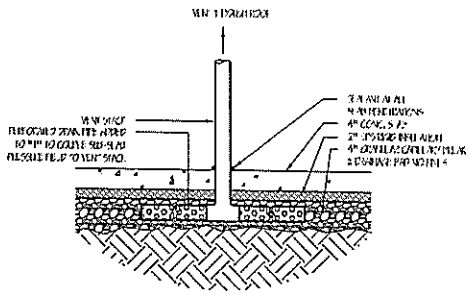

ONE VENT FOR EACH PORTION OF FOUNDATION

3 RADON DE-PRESSURIZATION DETAIL
1" = 1'-0"

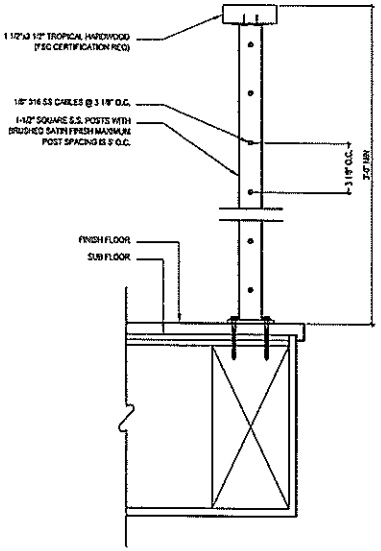

4 "AGS" S.S. SURFACE MOUNTED CABLE RAIL
3" = 1'-0"

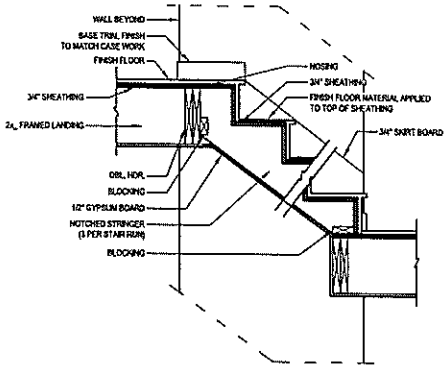

PLY TREAD W/ FINISH MATERIAL APPLIED

5 CLOSED RISER STAIR DETAIL
1" = 1'-0"

EXTERIOR

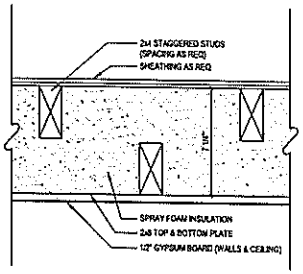

INTERIOR

6 STAGGERED EXT STUD WALL *(OPTIONAL)*
3" = 1'-0"

© COPYRIGHT BY Lubula & Kanyinda ALL RIGHTS RESERVED.

LUBULA & KANYINDA
107 MATLOCK MEADOW DRIVE
ARLINGTON, TEXAS 76002
682-551-5950

© COPYRIGHT BY Lubula & Kanyinda ALL RIGHTS RESERVED.

REVISION SCHEDULE:

PROJECT NAME:

DETAILS

PROJECT NUMBER: 0-1600 LDK
DATE:
DRAWN BY: LDK
CHECKED BY:
SHEET #

4.4

© COPYRIGHT BY Lubula & Kanyinda ALL RIGHTS RESERVED.