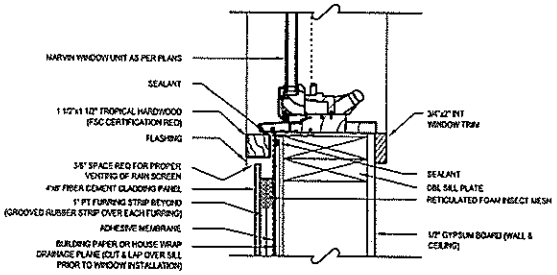

1 MARVIN WINDOW SILL DETAIL
3" = 1'-0"

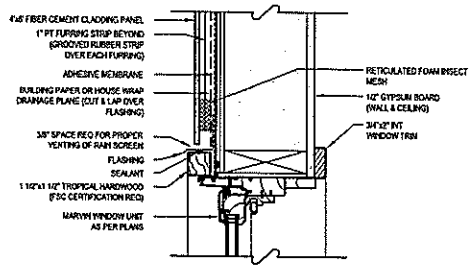

(DOOR HEAD SIMILAR)

2 MARVIN WINDOW HEAD DETAIL
3" = 1'-0"

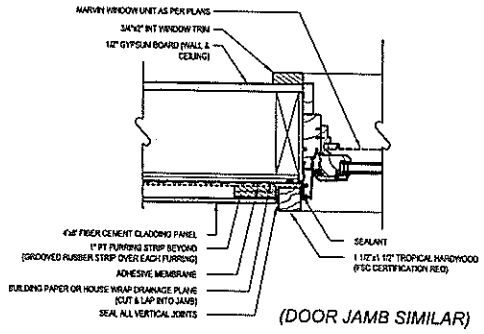

(DOOR JAMB SIMILAR)

3 MARVIN WINDOW JAMB DETAIL
3" = 1'-0"

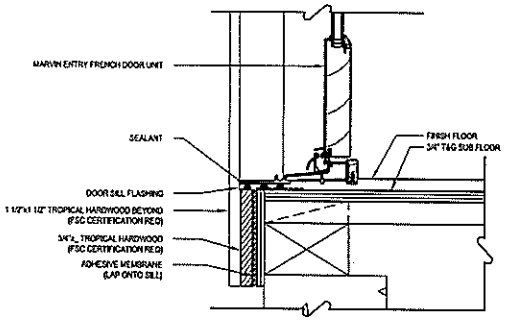

(SIMILAR FOR ALL DOOR SILLS)

4 MARVIN ENTRY FRENCH DOOR SILL
3" = 1'-0"

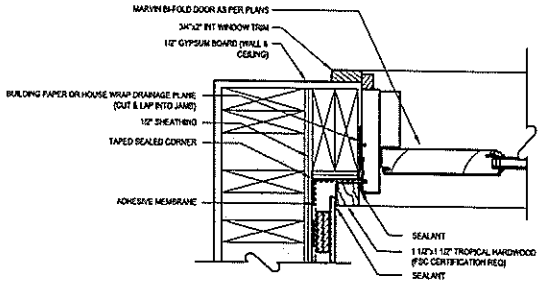

5 MARVIN BI-FOLD DOOR JAMB
3" = 1'-0"

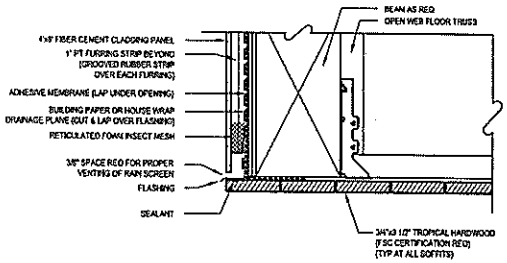

6 UNDERSIDE OF OVERHANG (TYP)
3" = 1'-0"

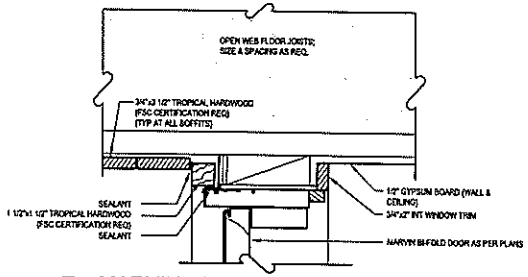

7 MARVIN BI-FOLD DOOR HEAD
3" = 1'-0"

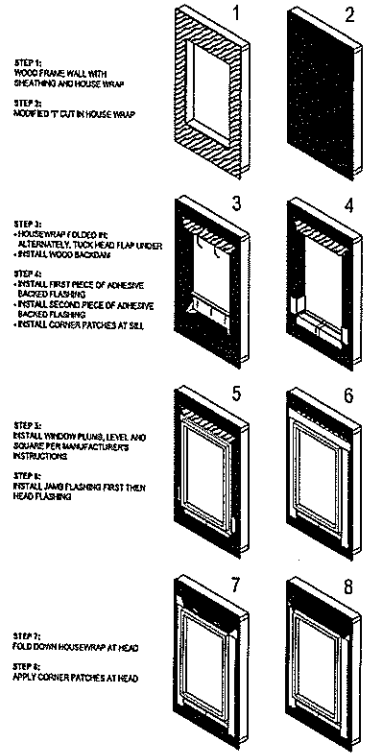

8 HOUSE WRAP @ WINDOW
NTS

© COPYRIGHT BY lubula & kanyinda ALL RIGHTS RESERVED.

LUBULA D. KANYINDA
107 MATLOCK MEADOW DRIVE
ARLINGTON, TEXAS 76002
682-551-6950

© COPYRIGHT BY lubula & kanyinda ALL RIGHTS RESERVED.

REVISION SCHEDULE:

PROJECT NAME:

DETAILS

PROJECT NUMBER: C-1609 LDK
DATE:
DRAWN BY: LDK
CHECKED BY:
SHEET #

4.3