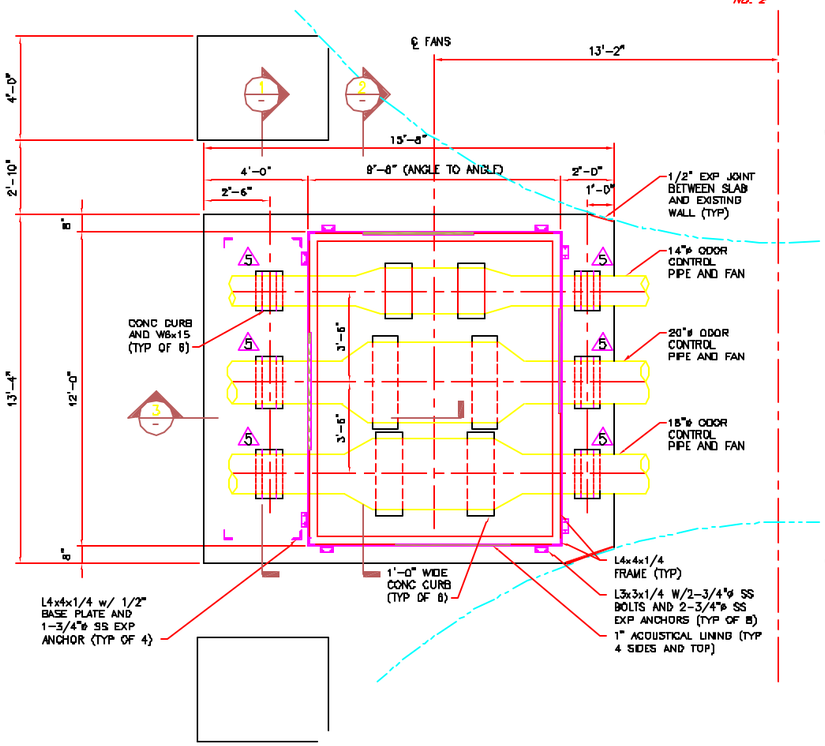

BASE PLAN
SCALE: 3/8"=1'-0"

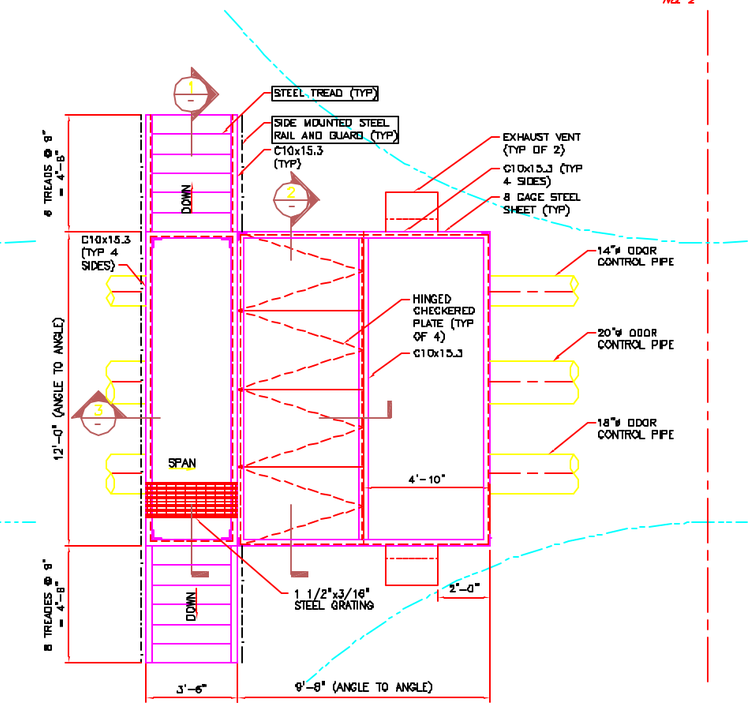

TOP PLAN
SCALE: 3/8"=1'-0"

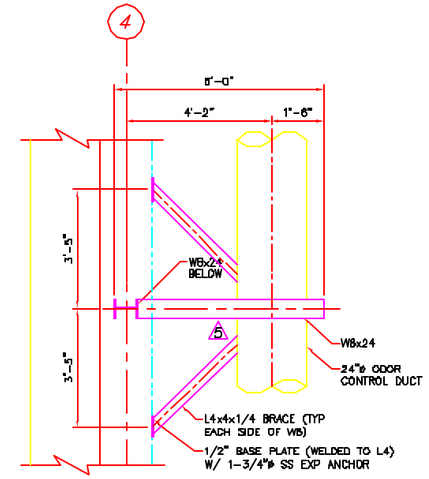

PLAN
SCALE: 1/2"=1'-0"

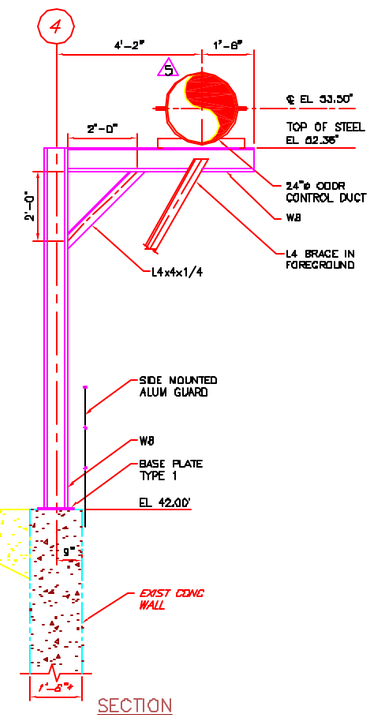

SECTION
SCALE: 1/2"=1'-0"

TYPE V

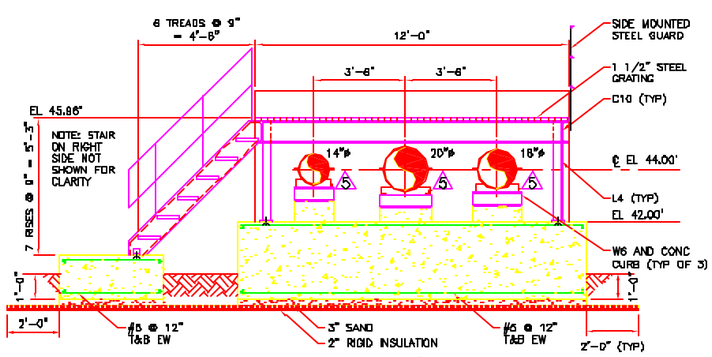

SECTION
SCALE: 3/8"=1'-0"

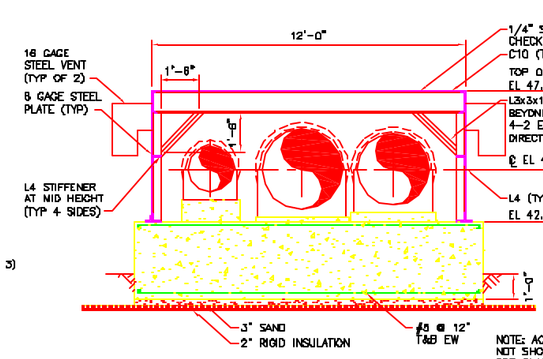

NOTE: ACCOUSTICAL LINING NOT SHOWN IN SECTIONS FOR CLARITY

SECTION
SCALE: 3/8"=1'-0"

TYPE U

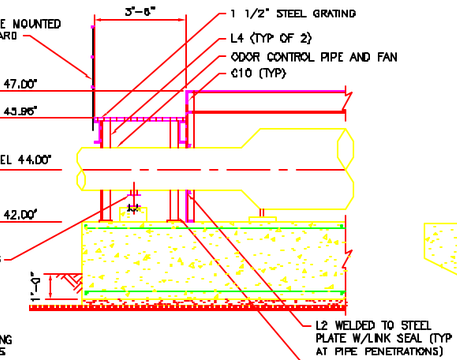

SECTION
SCALE: 3/8"=1'-0"

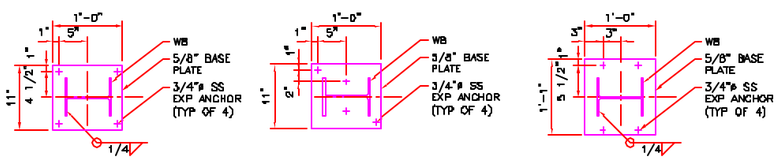

TYPE 1

NOTE: BASE PLATE CONFIGURATIONS MAY BE FIELD ADJUSTED BASED ON FIELD CONDITIONS AND TO PROVIDE ADEQUATE ANCHOR EDGE DISTANCE (4" MINIMUM)

TYPE 2

TYPE 3

BASE PLATE DETAILS
SCALE: 1"=1'-0"

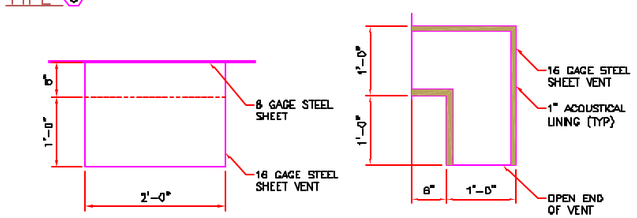

PLAN

SECTION

NOTE: ALL WELDED CONSTRUCTION

EXHAUST VENT DETAIL
SCALE: 1"=1'-0"

NOTES:

1. * INDICATES DIMENSIONS AND/OR ELEVATIONS TAKEN FROM THE FOLLOWING RECORD DRAWINGS:
   A. POLLUTION ABATEMENT FACILITIES – CONTRACT NO. 8 WASTEWATER TREATMENT PLANT, PORTLAND WATER DISTRICT, BY CAMP DRESSER & MCKEE INC., DATED FEBRUARY 1973.
   B. GRIT REMOVAL AND FLOW SPLITTING FACILITIES UPGRADE, PORTLAND WATER DISTRICT, PORTLAND, MAINE BY WRIGHT-PIERCE DATED MARCH 2000.
   GENERAL CONTRACTOR SHALL FIELD VERIFY ALL DIMENSIONS AND ELEVATIONS AND NOTIFY THE ENGINEER OF ANY DISCREPANCIES.
2. ⊗ INDICATES STRUCTURAL PIPE SUPPORT FRAMING

   ⚠ INDICATES PIPE SUPPORT. SEE DRAWING S-3 FOR PIPE SUPPORT TYPES.
   SEE DRAWINGS S-12 THROUGH S-18 FOR STRUCTURAL PIPE SUPPORT FRAMING DETAILS.
3. ALL STRUCTURAL STEEL AND STEEL BOLTS SHALL BE HOT-DIPPED GALVANIZED.
4. GENERAL CONTRACTOR SHALL COORDINATE THE REQUIRED TOP OF STEEL ELEVATIONS BASED ON THE ODOR CONTROL PIPE ELEVATIONS AND DEPTH OF PIPE SUPPORTS. PROVIDE 1/2 INCH THICK SHIM PLATES AS REQUIRED. SUPPORTS WILL REQUIRE FIELD WELDING TO STRUCTURAL STEEL OR FIELD DRILLING OF BOLT HOLES. ALL DAMAGED GALVANIZED SURFACES DUE TO FIELD WELDING AND BOLTING SHALL BE REPAIRED WITH ZINC TOUCH UP PAINT AS SPECIFIED.
5. FOR GENERAL STRUCTURAL NOTES AND STANDARD DETAILS SEE DRAWINGS S-17, S-18 AND S-19.

PROGRESS PRINTS	DATE
ISSUED FOR REVIEW	4-9-01
ISSUED FOR BIDDING	5-4-01
VALUE ENGINEERING	
NOT WORKED ON	
FILENAME	

NO	REVISIONS	APP'D	DATE
1			
2			
3			
4			
5			
6			

DRAWN BY DCS
CHECKED BY WJF/PFB
DATE 5-4-01
APPROVED BY DCS
DATE 5-4-01
BOOK NO.
PROJECT NO. 70634
SCALE AS NOTED

Wright-Pierce
98 Main Street Topsham, Maine USA 04086
TEL (207) 725-8721 FAX (207) 729-8414

PORTLAND WATER DISTRICT
PORTLAND, MAINE
PRIMARY SEDIMENTATION BASINS
UPGRADE WITH ODOR CONTROL FACILITIES

PIPE SUPPORTS
DETAILS V

DWG S-16
25 OF 79