NOTE:

1. DEMOLISH EXISTING PG-RF-2 LOCATED ABOVE GRADE. INSTALL NEW TIERED PENTHOUSE LOUVER LD-ER-2A AND DAMPER LD-ER-2B ABOVE GRADE ON EXISTING BASE.
2. DEMOLISH EXISTING DAMPER LOCATED IN ELECTRICAL ROOM CEILING. INSTALL DRIP PAN AS SHOWN IN DETAIL 1.
3. THE CONTRACTOR SHALL COORDINATE THE EXISTING CURB DIMENSIONS WITH THE NEW PENTHOUSE LOUVER. THE CONTRACTOR SHALL PROVIDE A SUPPLEMENTARY MATING CURB ADAPTER TO ALLOW THE EXISTING CURB TO CONNECT WITH THE NEW PENTHOUSE LOUVER. SEE SPECIFICATION 15598 FOR CURB ADAPTER REQUIREMENTS.

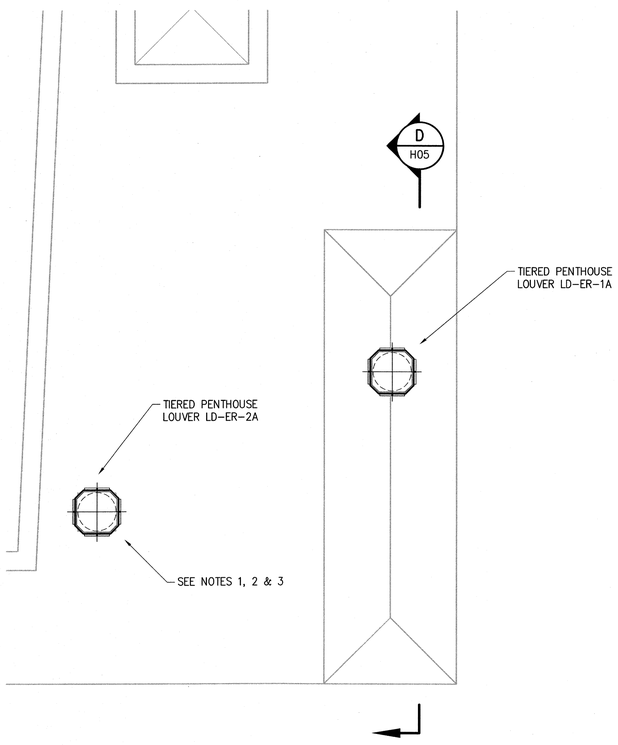

TOP PLAN
1/4" = 1'-0"

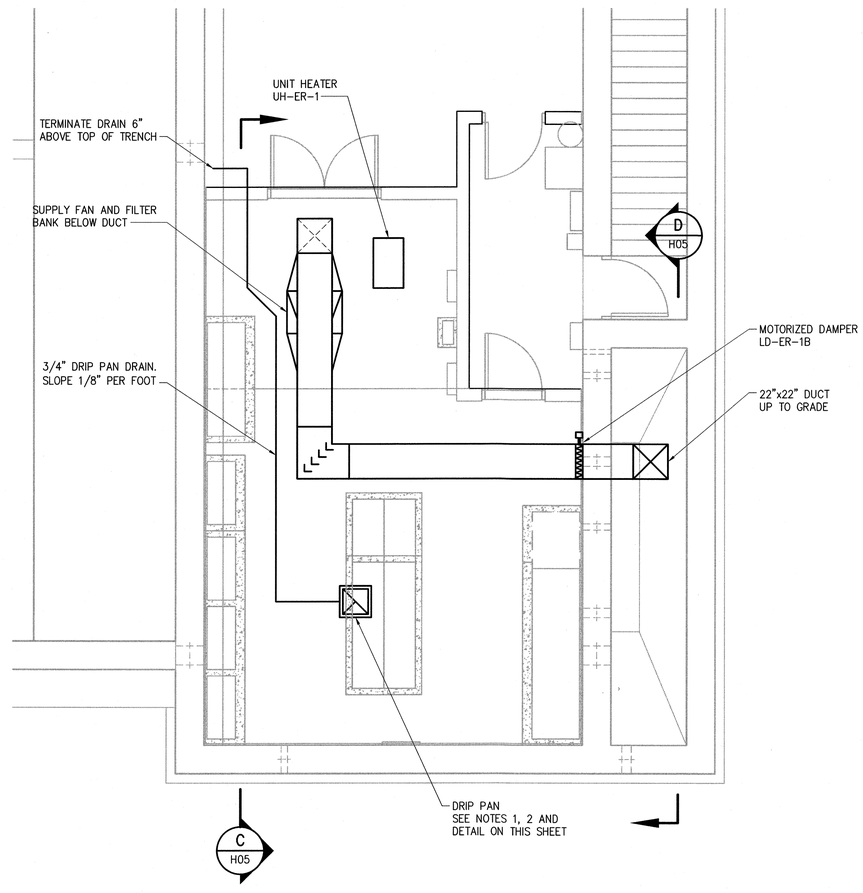

BOTTOM PLAN
1/4" = 1'-0"

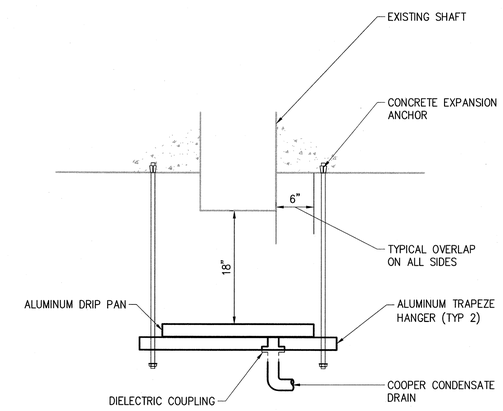

DRIP PAN

DETAIL 01 / H04
NONE

1/4"=1'-0" 1 0 1 2 3 7'

FINAL DRAWING - ISSUED FOR CONSTRUCTION

NO.	DATE	ISSUED FOR	BY
1	MAY 2015	CONSTRUCTION	BIL

CADD

DESIGNED SB
DRAWN MJB
CHECKED CMB
PROJ.ENGR. BIL

HAZEN AND SAWYER
Environmental Engineers & Scientists
HAZEN AND SAWYER, P.C.
24 FEDERAL STREET 5TH FLOOR – BOSTON, MA 02110

STATE OF MAINE BENJAMIN LEVIN 18527 LICENSED PROFESSIONAL ENGINEER 5/20/15

PORTLAND WATER DISTRICT
PORTLAND, MAINE
EAST END WASTEWATER TREATMENT FACILITY
AERATION UPGRADE

ELECTRICAL ROOM
HVAC
TOP AND BOTTOM PLAN

DATE MAY 2015
DWG. NO.: H04
SHEET NO. : 74
FILE NAME: 90216-000H04

20150520 3:10P C:_BZProjects\90216-000 Portland Aeration Upgrade\Drawings\HVAC\90216-000H04.dwg LAST SAVED By: mbranot
XREFs=..\Tblock\90216-000-TB_34x22, ..\300-AT\AT-LP-SX, ..\300-AT\AT-PT-M, ..\300-AT\AT-PT-S, ..\300-AT\ST-LP-H, ..\300-AT\ST-PT-H, ..\300-AT\AT-PT-E
IMAGE=s=..\Tblock\2015.0520 - SEAL-MECH
PLOT DATE: May 20, 2015 - 3:10pm By:MBRANDT