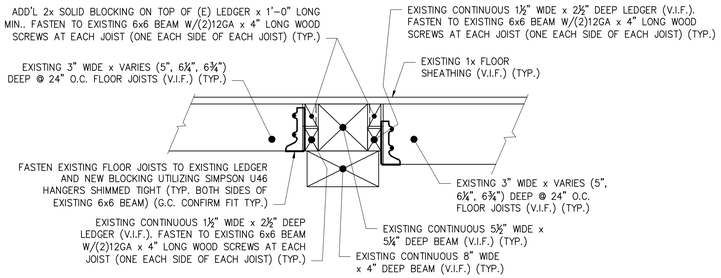

SECTION 1 / S2.1
1 1/2" = 1'-0"

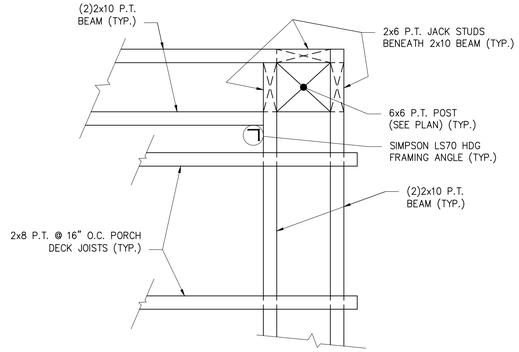

DETAIL A / S2.0
1 1/2" = 1'-0"

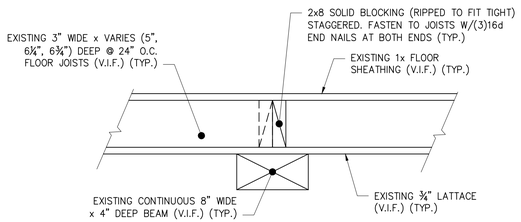

SECTION 2 / S2.1
1 1/2" = 1'-0"

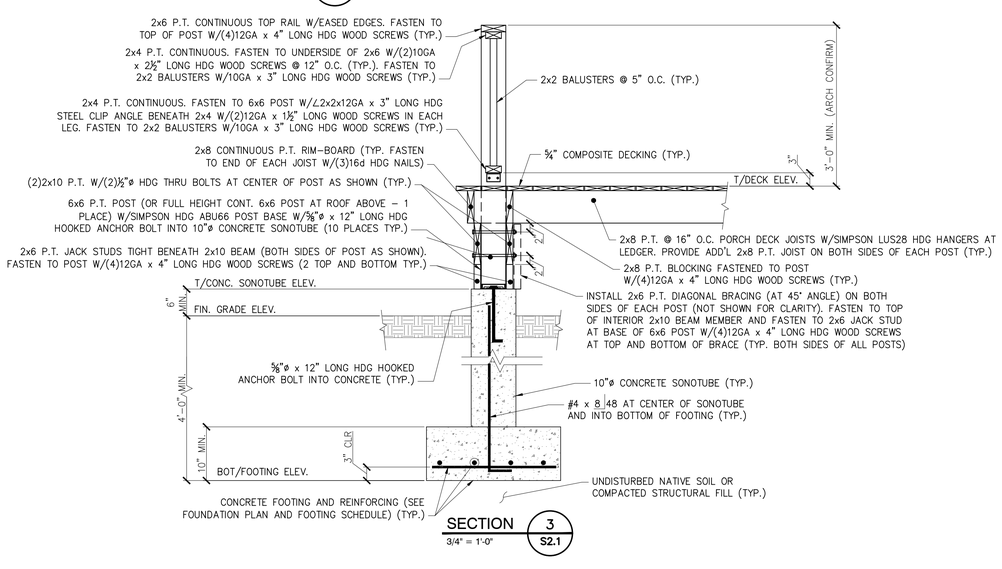

SECTION 3 / S2.1
3/4" = 1'-0"

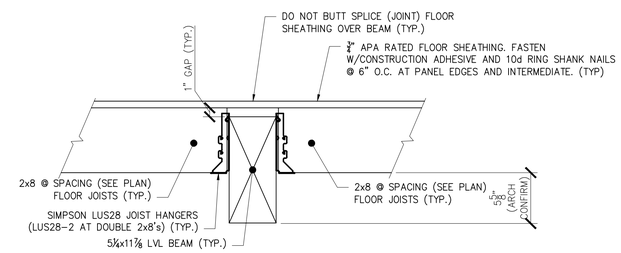

SECTION 4 / S2.1
1 1/2" = 1'-0"

THESE DRAWINGS HAVE BEEN DEVELOPED BY L&L STRUCTURAL ENGINEERING SERVICES, INC. FOR THE TITLED SET ONLY. THE DRAWINGS ARE THE SOLE PROPERTY OF L&L ENGINEERING SERVICES, INC. AND THEY SHALL NOT BE USED, LENT, COPIED OR ALTERED WITHOUT THE WRITTEN CONSENT OF L&L STRUCTURAL ENGINEERING SERVICES, INC.

L & L STRUCTURAL
ENGINEERING SERVICES, INC.
SIX Q STREET
SOUTH PORTLAND, MAINE 04106
PHONE: (207) 767-4830
FAX: (207) 799-5432
EMAIL: JLEASURE@L-L-ENG.COM

STATE OF MAINE
JOSEPH H. LEASURE
No. 6242
LICENSED
PROFESSIONAL ENGINEER

rev.	date	description	appr'd
A	06/09/17	PRICING & PERMIT ONLY	JHL
0	06/15/17	FOR CONSTRUCTION	JHL

designed by: JHL
drawn by: RJW
checked by: JHL
scale: AS NOTED
date: 06/09/2017
plot date: 06/15/2017
project # 2017-076

BUILDING LOCATED AT
39 MUNJOY STREET
PORTLAND, MAINE

EXT. DECK FOUND/FRAMING & FRAMING SECTIONS & DETS

S3.0