IF THIS SHEET IS NOT 24 X 36 IT IS A REDUCED SCALE PRINT – SCALE ACCORDINGLY

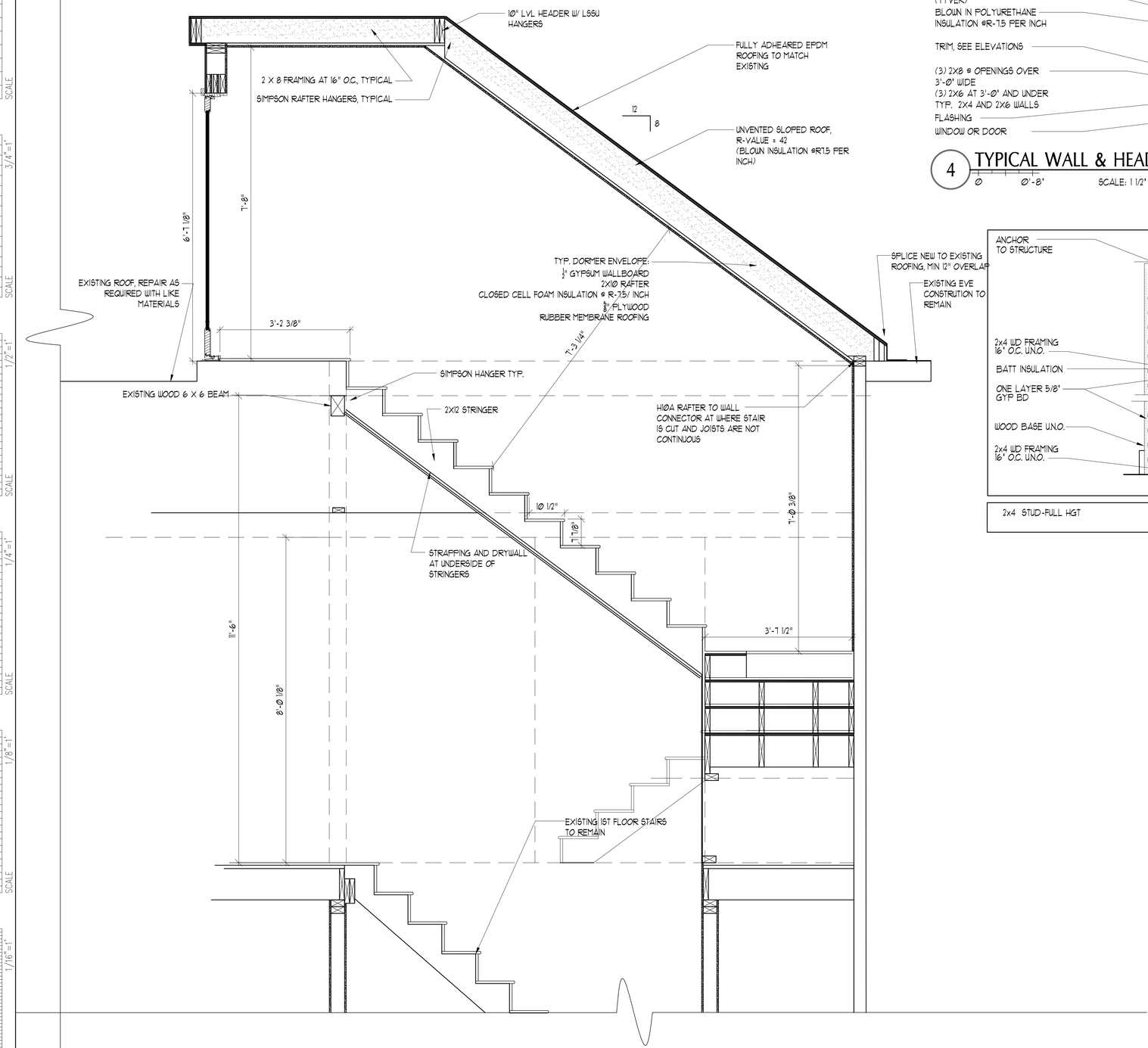

5 STAIR SECTION
A1.2 | A2.1
0 1'-4" SCALE: 3/4" = 1'-0"

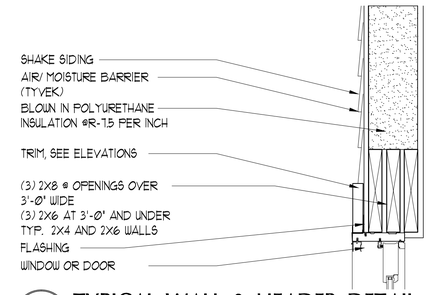

4 TYPICAL WALL & HEADER DETAIL
0 0'-8" SCALE: 1 1/2" = 1'-0"

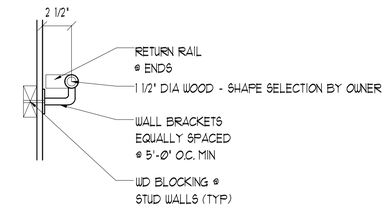

3 HANDRAIL DETAIL
0 9" SCALE: 1 1/2" = 1'-0"

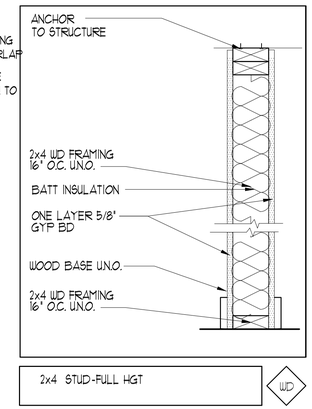

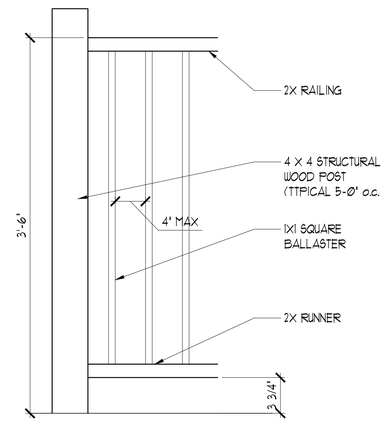

2 GUARDRAIL DETAIL
0 9" SCALE: 1 1/2" = 1'-0"

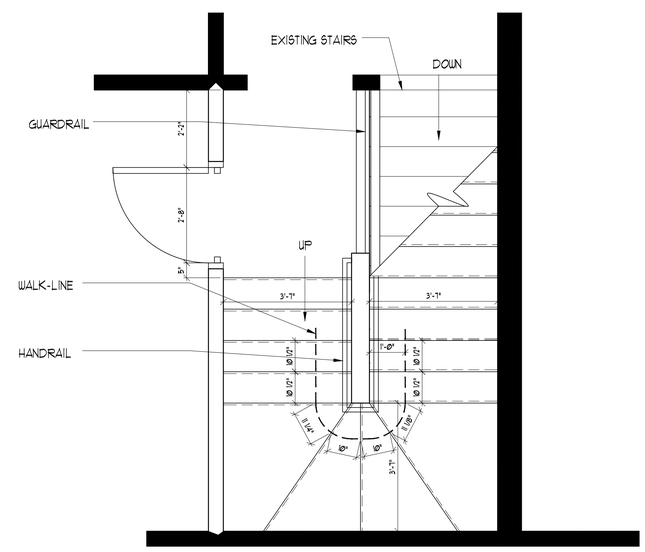

1 STAIR DETAIL
A1.2 | A2.1
0 2'-0" SCALE: 1/2" = 1'-0"

CHARETTE DESIGN
ARCHITECTURE • SUSTAINABILITY

41 YORK STREET
PORTLAND, MAINE 04101
207.831.7757
CHARETTE-DESIGN.COM

LICENSED ARCHITECT
JOHN C. CHARETTE
NO. 2956
STATE OF MAINE

LEBLANC RESIDENCE

59 MOODY STREET
PORTLAND, MAINE

#	DATE	DESCRIPTION
		REVISIONS

Date Issued	09.09.13
Project Number	1302
Drawing Scale	AS NOTED

SHEET NAME
STAIR SECTION AND DETAILS

Drawn By: KJS
Checked By: JCC

A2.1

COPYRIGHT: Reuse or reproduction of the contents of this document is not permitted without written permission of CHARETTE DESIGN, LLC