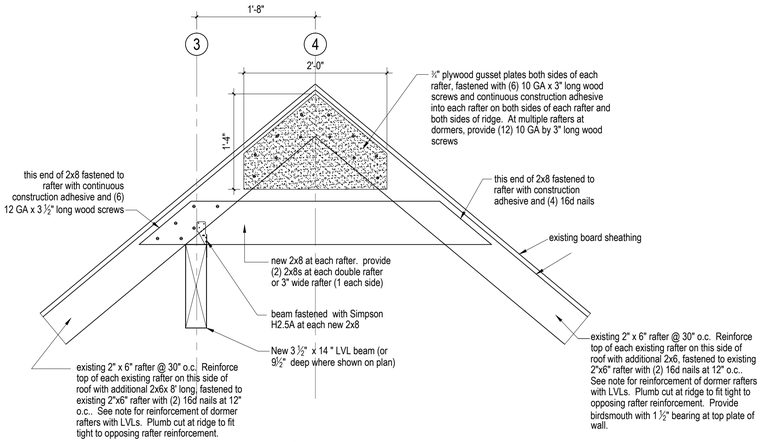

A Detail at Ridge Beam
1"= 1'-0"

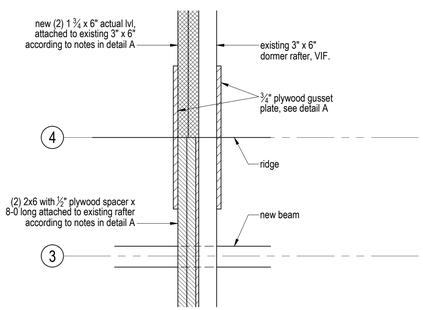

B Detail at Dormer Rafter
1"= 1'-0"

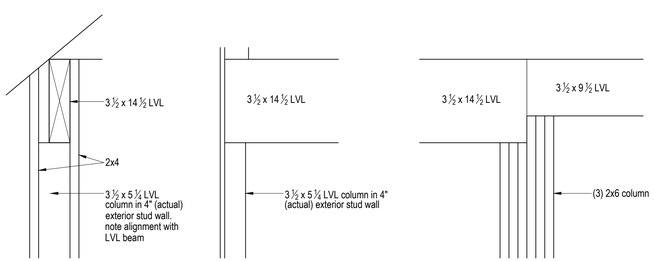

E Beam at gable end wall: post
1"= 1'-0"

D Beam at gable end wall
1"= 1'-0"

C Beam at intermediate support
1"= 1'-0"

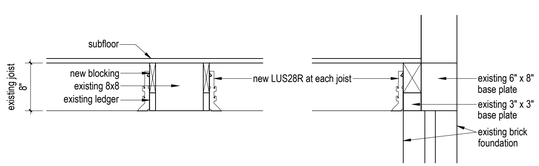

G 1st floor joist reinforcement
1"= 1'-0"

F 1st floor joist reinforcement
1"= 1'-0"

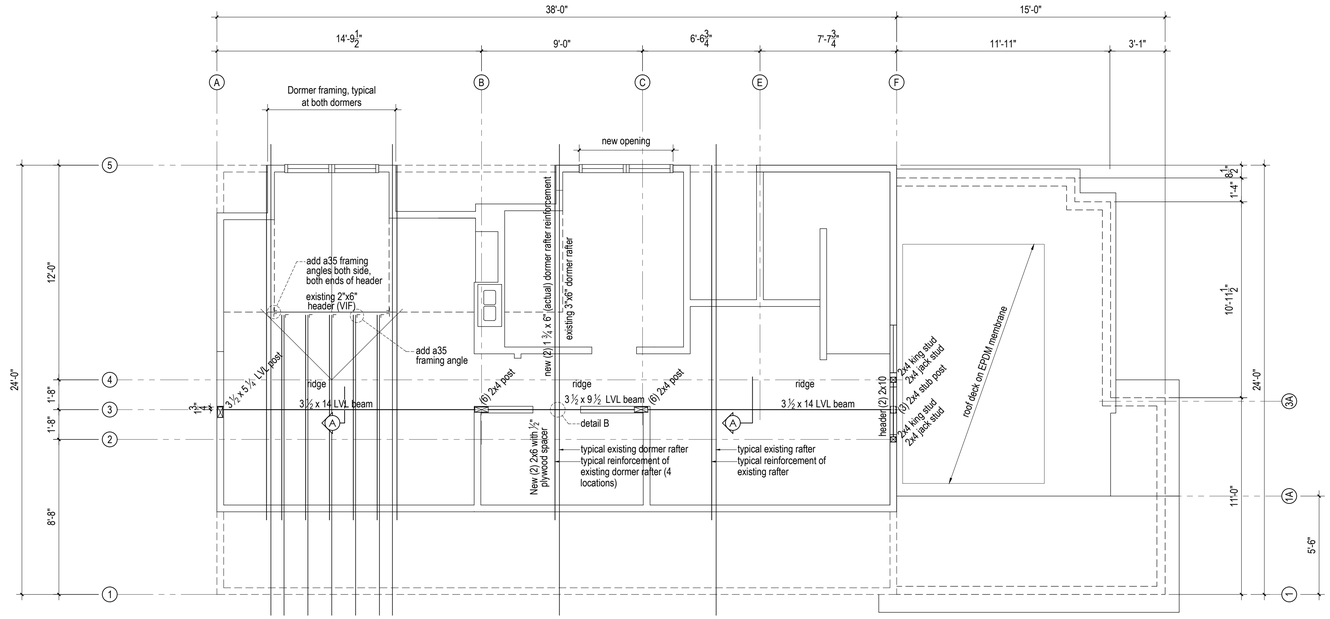

Roof framing and deck framing
1/4"= 1'-0"

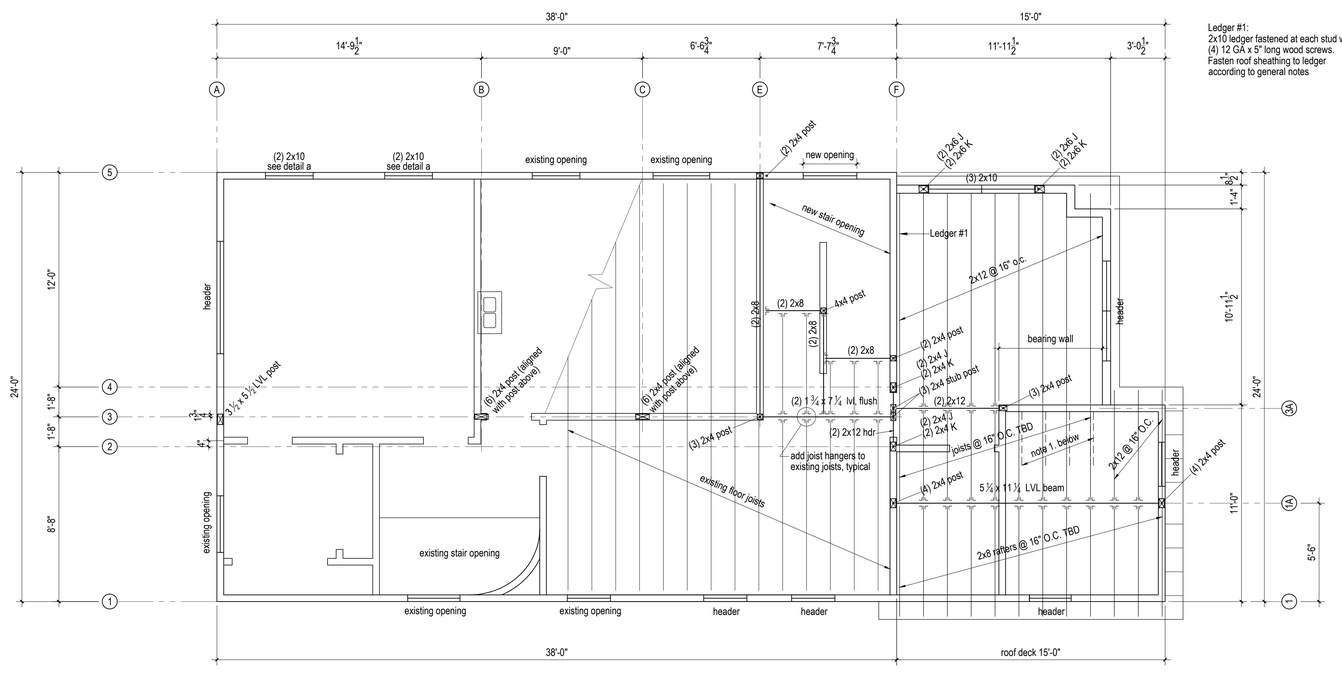

3rd floor framing & roof framing at rear
1/4"= 1'-0"

notes:
1. Provide additional framing to continue plane of sloped ceiling

project north

LICENSED ARCHITECT
JOSEF CHALAT
AR2354
STATE OF MAINE

©
Josef Chalat, Architect
PO Box 6283, 327 Ocean House Road
Cape Elizabeth, Maine 04107
ph: (207) 318-3234 - e: azimuthblu@gmail.com

Dates
08-04-2017 city submission
08-14-2017 city revisions 01

GC: Howard Williamson, Owner
Williamson Remodeling
phone: 207 380-5973,
email: hwillremodel.com

Elizabeth and Robert Knake Residence
Renovations and Addition, PHASE 1
36 O'Brion Street, Portland, Maine

Framing Plans:
3rf floor. & Roof

Sheet Number
s2