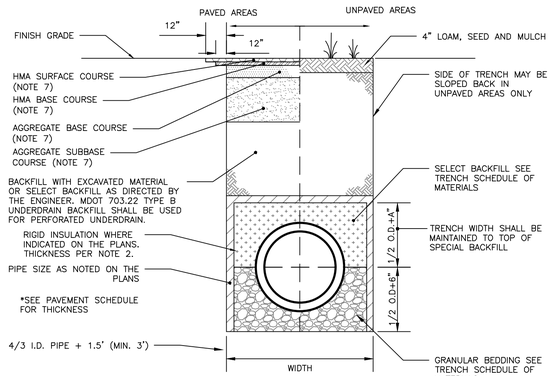

ALLOWABLE PIPE MATERIALS:
- REINFORCED CONCRETE PIPE (RCP) MIN. STRENGTH OF CLASS III
- PVC RING TYPE SEWER (SDR 35) OR EQUIVALENT, MIN PS-46 RATING
- PVC RING TYPE SEWER PIPE MEETING ASTM F 789
- DUCTILE IRON PIPE (DIP)
- ADS N-12 HP TRIPLE-WALL MIN PS-46 RATING
- ADS SANITITE HP MIN. PS-46

SCHEDULE OF MATERIALS		
TYPE OF PIPE	GRANULAR BEDDING	SELECT BACKFILL
CMP DUCTILE IRON RCP	MDOT 703.22 TYPE B UD BACKFILL	MDOT 703.22 TYPE B UD BACKFILL
PVC/HDPE	MDOT 703.22 TYPE C 3/4" CRUSHED STONE	MDOT 703.22 TYPE B UD BACKFILL
CMP	MDOT 703.22 TYPE C 3/4" CRUSHED STONE	MDOT 703.22 TYPE C 3/4" CRUSHED STONE

NOTES:
1. BRACING AND SHEETING OR OTHER TRENCH PROTECTION TO BE PROVIDED TO MEET APPLICABLE STATE AND O.S.H.A. SAFETY STANDARDS. ALL SUCH TRENCH PROTECTION TO BE THE RESPONSIBILITY OF THE CONTRACTOR.
2. STORM DRAIN COVER BETWEEN 2' AND 3' SHALL INCLUDE 4" OF RIGID INSULATION. COVER BETWEEN 3' AND 4' SHALL INCLUDE 2' RIGID INSULATION. OTHER UTILITIES: ADD 2" OF RIGID INSULATION FOR EACH FOOT ABOVE MINIMUM DEPTH.
3. INSTALL WARNING TAPE DIRECTLY ABOVE UTILITIES AT THE TOP OF SUBGRADE.
4. MINIMUM COVER
   4.1. 2'-0" – STORM DRAIN
   4.2. 5'-0" – SEWER
5. NO TREES SHALL BE PLANTED WITHIN 5' OF A SEWER PIPE OR SERVICE
6. THIS DETAIL SHALL BE APPLIED ONLY TO DRAINAGE PIPE TRENCHES OUTSIDE OF THE CITY OF PORTLAND ROW.
7. THICKNESS AS NOTED BY SURFACE DETAILS

STORM DRAIN AND SEWER TYPICAL TRENCH SECTION
NOT TO SCALE

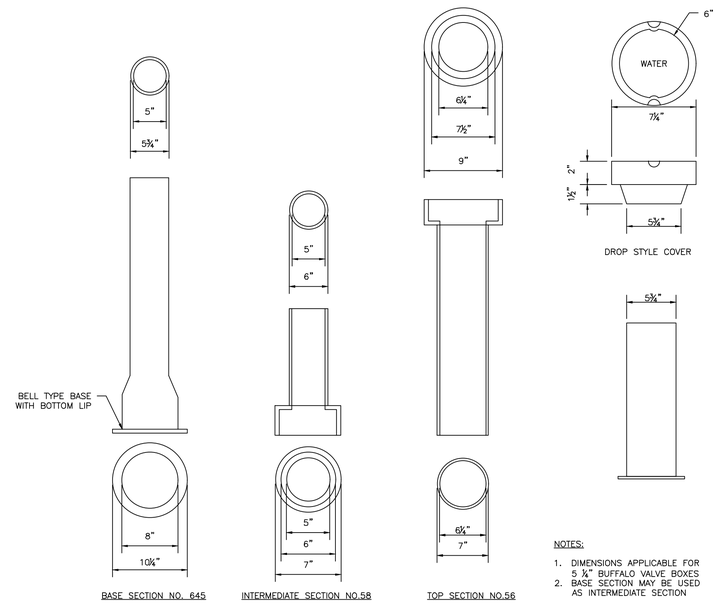

NOTES:
1. DIMENSIONS APPLICABLE FOR 5 ¼" BUFFALO VALVE BOXES
2. BASE SECTION MAY BE USED AS INTERMEDIATE SECTION

VALVE BOX & COVER
NOT TO SCALE

NOTES:
1. ANY ALTERNATE TRENCHING METHODS SHALL BE APPROVED IN ADVANCE BY THE CITY.
2. ALL CONSTRUCTION METHODS SHALL CONFORM TO THE CITY OF PORTLAND TECHNICAL STANDARDS FIGURE II-2.
3. BRACING & SHEETING OR OTHER TRENCH PROTECTION TO BE PROVIDED TO MEET APPLICABLE STATE AND O.S.H.A SAFETY STANDARDS. ALL SUCH TRENCH PROTECTION SHALL BE THE RESPONSIBILITY OF THE CONTRACTOR.
4. WHERE APPLICABLE, PERFORATIONS IN STORM DRAIN (PERF.SD) SHALL BE ORIENTED UP.
5. ALL STORM DRAINS SHALL BE PVC SDR 35 MIN PS-46 RATING OR OR IN ACCORDANCE WITH CITY OF PORTLAND TECHNICAL MANUAL , SECTION 2 – SANITARY SEWER AND STORM DRAIN – PART 2.5.2
6. IN PAVED AREAS, DEPTHS OF GRAVEL AND HOT MIX ASPHALT PAVEMENT SHALL MATCH THE GREATER OF EXISTING CONDITIONS OR THE REQUIREMENTS FOR THE CORRESPONDING STREET CLASSIFICATION.
7. THIS DETAIL SHALL BE APPLIED ONLY TO PIPE TRENCHES WITHIN OF THE CITY OF PORTLAND ROW.STORM DRAIN COVER BETWEEN 2' AND 3' SHALL INCLUDE 4" OF RIGID INSULATION. COVER BETWEEN 3' AND 4' SHALL INCLUDE 2' RIGID INSULATION. OTHER UTILITIES: ADD 2" OF RIGID INSULATION FOR EACH FOOT ABOVE MINIMUM DEPTH.

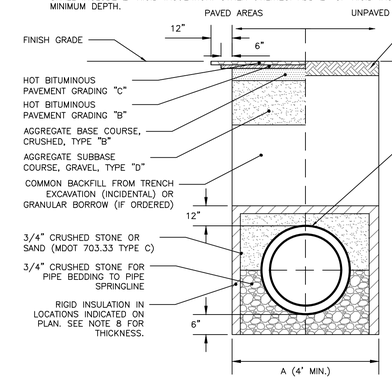

TRENCH WIDTH	
PIPE DIAMETER (IN)	MAX. TRENCH WIDTH, A (FT)
4	4
6	4
8	4
10	4
12	5
15	5
18	5
24	6
36	6
48	7

CITY OF PORTLAND TYPICAL PIPE TRENCH DETAIL
NOT TO SCALE

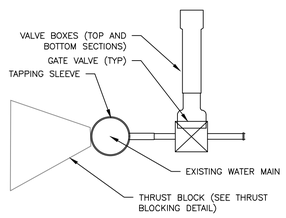

SIDE VIEW

TAPPING SLEEVE AND VALVE
NOT TO SCALE

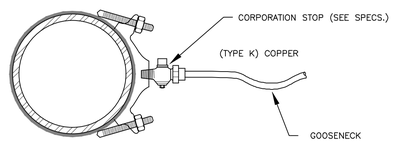

SERVICE SADDLE: 1-1/2" AND 2" C.C. THREAD)
NOT TO SCALE

NOTES:
1. ALL MATERIALS AND INSTALLATION PROCEDURES MUST COMPLY WITH THE CITY OF PORTLAND WATER DISTRICT (PWD) SPECIFICATIONS.
2. CURB STOP BALL VALVE TO BE MADE OF COPPER OR BRASS UNLESS OTHERWISE NOTED BY THE PORTLAND WATER DISTRICT.
3. SERVICE LINE TO BE MADE OF TYPE K COPPER.
4. CONCRETE BLOCKING SHALL BE ADDED TO THE BASE OF THE CURB STOP TO PROVIDE STRUCTURAL SUPPORT FOR THE CURB STOP AND SERVICE BOX.

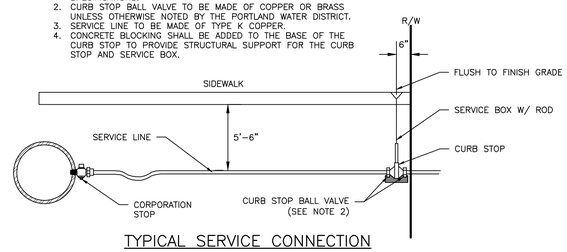

TYPICAL SERVICE CONNECTION
NOT TO SCALE

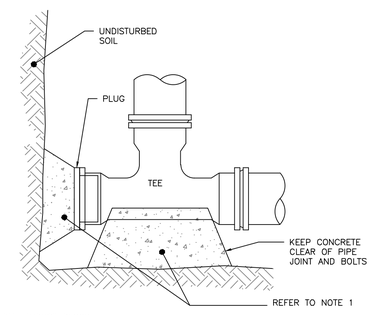

NOTES:
1. IF DEAD END WITH TEE, THRUST BLOCK WOULD BE REQUIRED OR AS DIRECTED BY THE ENGINEER
2. SEE THRUST/RETAINER GLAND SCHEDULE FOR TYPE OF BLOCKING TO BE USED ON BENDS

END SECTION

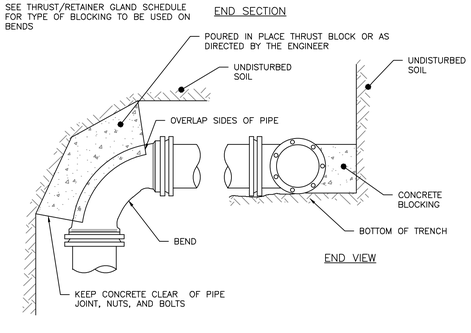

END VIEW

TOP VIEW

THRUST BLOCKING: REGULAR BEND
NOT TO SCALE

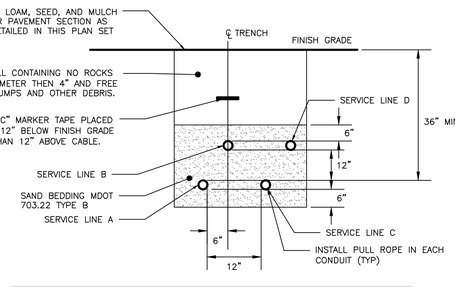

CONDUIT TYPE				
SERVICE	CONDUIT SIZE	GRASS AND PAVED AREAS	UTILITY	REMARKS
A	2–5"	SCHEDULE 40 PVC ELECTRICAL GRADE	PRIMARY POWER	SEE NOTE 1
B	2–4"	SCHEDULE 40 PVC	COMMUNICATION	–
C	2–4"	SCHEDULE 40 PVC ELECTRICAL GRADE	SPARE	IF REQUIRED
D	2–4"	SCHEDULE 40 PVC	CABLE	–

NOTES:
1. ONE CONDUIT CAPPED FOR SPARE, PROVIDE GALVANIZED STEEL LONG SWEEP AT RISER POLE AND EXTEND GALVANIZED CONDUIT TO 10" ABOVE GRADE AT POLE WITH STAND-OFF BRACKETS.
2. MINIMUM SEPARATION OF 24 INCHES BETWEEN PRIMARY CABLE/CONDUIT AND GAS LINES SHALL BE MAINTAINED.

UTILITY TRENCH: PRIMARY AND SECONDARY POWER, TELEPHONE, AND CABLE
NOT TO SCALE

NOTES:
1. LOCATION WITH WARNING TAPE SHALL BE INSTALLED OVER CENTERLINE OF PIPE AT A MAXIMUM OF 24 INCHES BELOW FINISH GRADE.
2. SITE CONTRACTOR TO COORDINATE CONNECTION OF SEWER LATERAL TO HOUSEHOLD PLUMBING WITH ARCHITECTURAL CONTRACTOR
3. CONNECTION OF PROPOSED SEWER LATERAL TO HOUSEHOLD PLUMBING SHOULD INCORPORATE USE OF SIMILAR PIPE MATERIALS. IN THE CASE OF DISSIMILAR PIPES BEING USED, A FERNCO FLEXIBLE COUPLING SHALL BE USED.

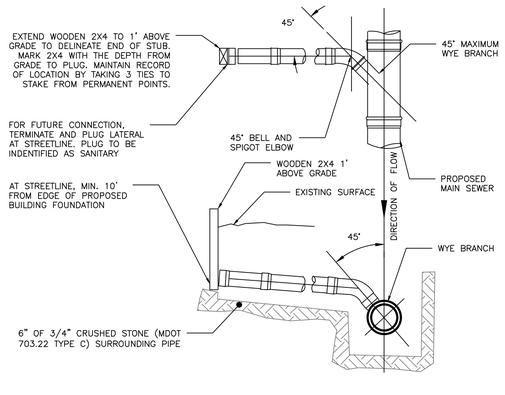

SEWER TEE/WYE CONNECTION DETAIL
NOT TO SCALE

NOTES:
1. THE WATER TRENCH SHALL BE CONSTRUCTED IN ACCORDANCE WITH THE PORTLAND WATER DISTRICT STANDARD DETAILS & SPECIFICATIONS.
2. IF LESS THAN 5'-6" OF COVER IS POSSIBLE ADD 1 INCH OF "BLUE DOW" RIGID INSULATION FOR EVERY 12" LESS COVER.

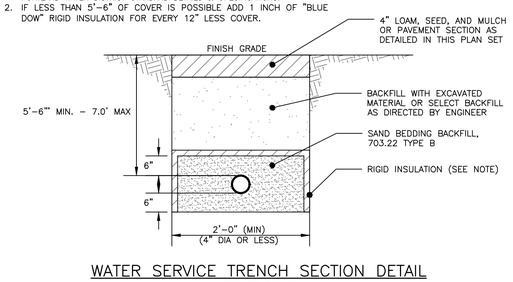

WATER SERVICE TRENCH SECTION DETAIL
NOT TO SCALE

PRELIMINARY
NOT ISSUED FOR CONSTRUCTION

ISSUED FOR	BY DATE
PRELIM. APPLICATION	WHS 3/22/16

REVISION	REV. DATE

UTILITY DETAILS

PROJECT NAME: 40 O'BRION STREET REDEVELOPMENT

215 FORESIDE ROAD, LLC.
215 FORESIDE ROAD FALMOUTH, MAINE 04105

DRAWING NAME:

ACORN ENGINEERING, INC.

THIS PLAN SHALL NOT BE MODIFIED WITHOUT WRITTEN PERMISSION FROM ACORN ENGINEERING, INC. ANY MODIFICATIONS MADE WITHOUT PERMISSION OR OTHERWISE, SHALL BE AT THE USER'S SOLE RISK AND WITHOUT LIABILITY TO ACORN ENGINEERING, INC.

ACORN ENGINEERING, INC.
158 DANFORTH STREET, PORTLAND, MAINE 04102
(207) 775-2655

FILE:	1070_DETAILS
DATE:	1/22/16
JN:	1070
SCALE:	NTS
DESIGNED BY:	WHS
DRAWN BY:	WHS
CHECKED BY:	WHS

STATE OF MAINE WILLIAM H. SAVAGE No. 11448 3-22-16 LICENSED PROFESSIONAL ENGINEER

DRAWING NO.
C-42