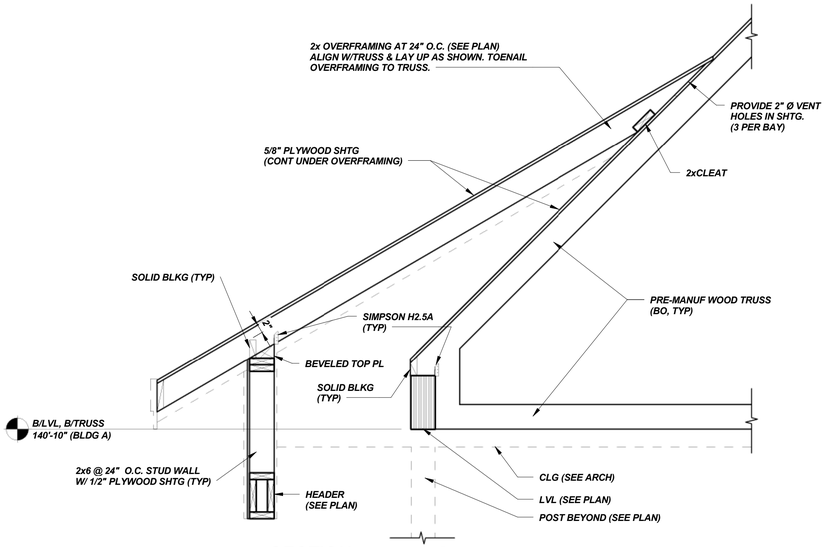

SECTION 1 / S1.3
3/4"=1'-0"

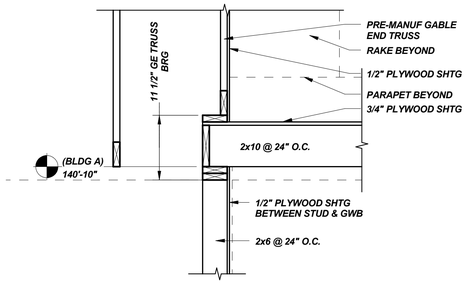

SECTION 2 / S1.3
3/4"=1'-0"

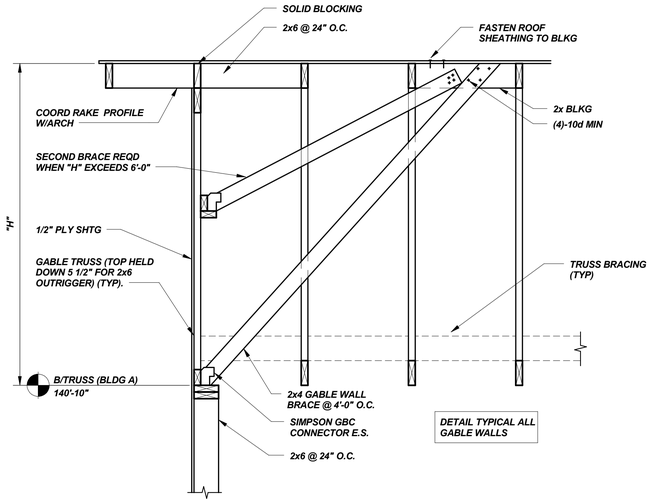

SECTION 4 / S1.3
3/4"=1'-0"

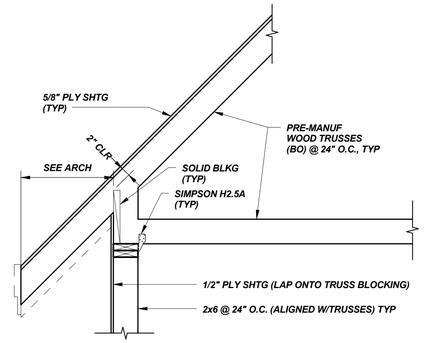

SECTION 3 / S1.3
3/4"=1'-0"

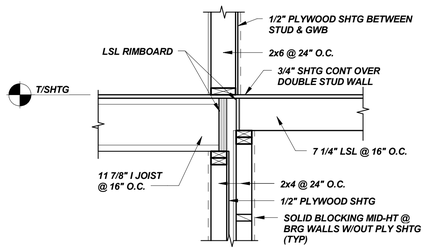

SECTION 5 / S1.3
3/4"=1'-0"

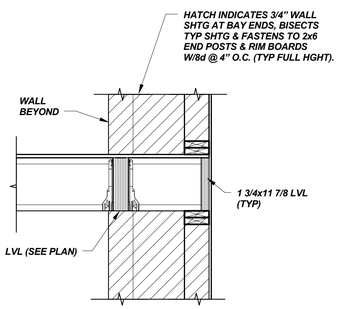

SECTION 6 / S1.3
3/4"=1'-0"

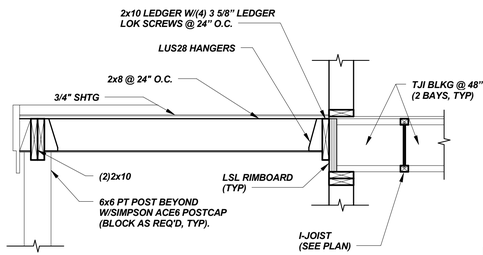

SECTION 7 / S1.3
3/4"=1'-0"

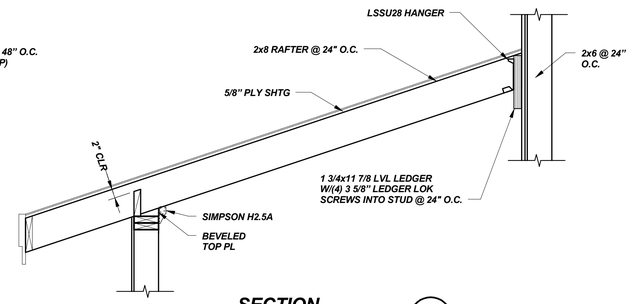

SECTION 8 / S1.3
3/4"=1'-0"

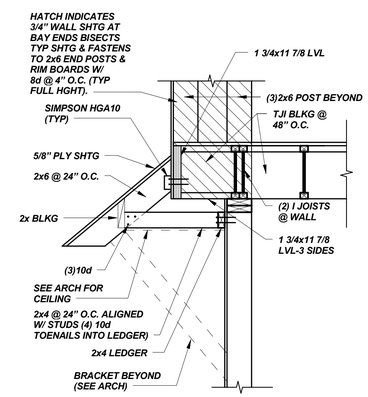

SECTION 9 / S1.3
3/4"=1'-0"

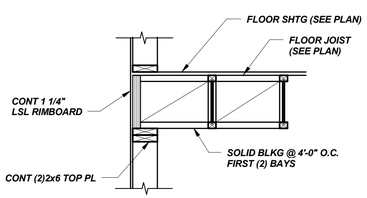

SECTION 10 / S1.3
3/4"=1'-0"

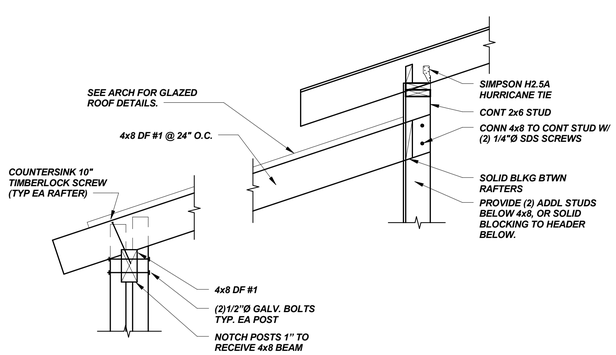

SECTION 11 / S1.3
3/4"=1'-0"

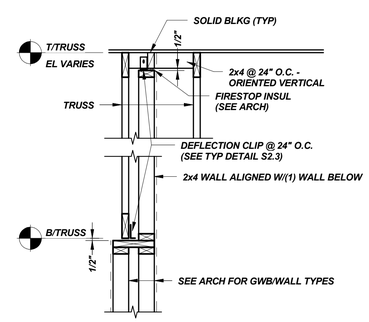

RATED WALL AT ROOF TRUSS DETAIL

BECKER STRUCTURAL ENGINEERS
75 York Street, Portland, Maine 04101
207.879.1838 ● beckerstructural.com

PDT ARCHITECTS
49 DARTMOUTH STREET
PORTLAND, MAINE 04101
207-775-1059
www.pdtarchs.com

COPYRIGHT 2012
PDT Architects
Reuse or reproduction of the contents of this document is not permitted without written permission of PDT Architects.

Adams School Redevelopment

VESPER/WILSON/MOODY ST--PORTLAND, ME

STATE OF MAINE
PAUL B. BECKER
NO. 6554
LICENSED
PROFESSIONAL ENGINEER

JOB NO.
08-056

DRWN. CHK
D.S.B.

SCALE:
As indicated

ISSUE
03/05/12

TITLE
SECTIONS & DETAILS

SHEET
S2.2